RetroMax™ Retroviral System

Catalog No.: 10040K
Version 05.18.06

STORAGE CONDITIONS:

Store the vectors at -20°C

Transfection buffer and the CaCl2 solution can be stored at 4°C up to six months

For research use only. Not for diagnostic or other commercial applications. Not for use in humans.

Disclaimer: Production of retroviruses in mammalian cells is covered by several United States patents issued to CellGenesys, Inc. Imgenex will not be responsible for any patent infringements resulting from use of the RetroMax kits or vectors to produce retroviral particles for commercial use.

IMGENEX Corporation
11175 Flintkote Avenue, Suite E
San Diego, CA 92121
Tel: 858-642-0978
Toll free: 888-723-4363
Fax: 858-642-0937
Email: info@imgenex.com
Web site: www.imgenex.com

TABLE OF CONTENTS

I. Components 3

II. Introduction 4

III. Overview 6

Outline of RetroMax Procedure

IV. Protocol 8

Transfection of 293 cells with retroviral vector

Determining the Viral Titer

Selection for stable virus-producing cell lines

V. Maximizing Retrovirus Titers 13

VI. The Safe Use of Retrovirus Vectors 14

VII. References 16

VIII. Appendix 17

A. Expression Vectors 18

B. Packaging Vectors 22

C. LacZ Retroviral Reporter Vector 24

D. Nucleotide Sequence 25

IMGENEX Tel: 858-642-0978 Toll Free: 1-888-723-4363 Fax: 858-642-0937
Email: info@imgenex.com Web Site: www.imgenex.com

I. COMPONENTS

Store at -20°C		
Cat. No.	Description	Quantity
10041P	pCLXSN Expression Vector (0.5 mg/ml)	20 ul
10042P	pCLNCX Expression Vector (0.5 mg/ml)	20 ul
10043P	pCLNRX Expression Vector (0.5 mg/ml)	20 ul
10044P	pCLNDX Expression Vector (0.5 mg/ml)	20 ul
10045P	pCL-Eco Packaging Vector (0.5 mg/ml)	20 ul
10046P	pCL-Ampho Packaging Vector (0.5 mg/ml)	20 ul
10047P	pCL-10A1 Packaging Vector (0.5 mg/ml)	20 ul
10048P	pCLMFG-LacZ Retrovirus Reporter Vector (0.5 mg/ml)	20 ul

Store at 4°C		
	Description	Quantity
	Transfection Buffer (2x)	10 ml
	2.0 M CaCl2	2 ml

Additional Materials Required:

- 293 Cells may be ordered from ATCC
- G418
- Cell culture reagents: DMEM, Fetal bovine serum, penicillin-streptomycin
- Trypsin-EDTA
- Phosphate buffered saline
- Cloning cylinders (for picking up stably transfected colonies)
- Polybrene for retroviral infection.

II. INTRODUCTION

Retrovirus vectors are very efficient tools for stably introducing genes into dividing cells. RetroMax™ retrovirus vector system is based on the pCL vector system developed by Naviaux et al. (1). The vectors used in this system have been designed to maximize recombinant-retrovirus titers in a simple, efficient, and flexible experimental system. All members of the RetroMax expression vector family (pCLXSN, pCLNCX, pCLNRX, and pCLNDX) have an extended packaging signal (y+) and are derived from safety-modified retrovirus vectors in which the gag open reading frame has been stopped by a point mutation, thereby minimizing the opportunity for replication-competent retrovirus production by recombination with packaging genome. The 5'-enhancer of Moloney murine sarcoma virus long terminal repeat (LTR) which is inhibited by E1A has been deleted and fused at the TATA box of the human CMV immediate early region. (1). This results in initiation of viral RNA at or near the +1 position in the R region of the naturally programmed retrovirus. This results in transient-retrovirus titers in the range of 2-5 x 106 CFU/ml when 293 cells are used.

All three members of the RetroMax packaging vectors (pCL-Eco, pCL-Ampho, and pCL-10A1) have also been safety modified by deleting the packaging signal and the 3' LTR enhancer. This makes the RNAs of the helper genome virtually un-packageable. The advantage of these pCL packaging plasmids is a high level expression of gag, pol, and env proteins with a balanced stoichiometry that is not achieved with either transiently or stably expressed split-genome packaging constructs. Inclusion of these three packaging plasmids in the RetroMax kit allows the choice of expressing ectotropic, amphotropic, or 10A1 envelopes which leads to greater experimental flexibility.

The RetroMax system is designed for maximal virus titer in 293 cells. It takes advantages of two properties of 293 cells, i) high level of transfectibility, ii) strong E1A-mediated stimulation of CMV promoter controlled transcription. 293 cells are of nonmurine origin, hence the problem of selective packaging and transfer of VL30 genomes (present in all murine packaging cells) is avoided. Vector supernatants are free of helper virus and are of sufficiently high titer within 2 days of transient transfection in 293 cells to permit infection of more than 50% of dividing target cells in culture.

By introducing a retroviral vector into a cell expressing retroviral proteins, retroviral articles (virions) are shed into the culture medium at the rate of about one infectious particle/cell/day. Retrovirus tropism is determined at three levels. The first is simply a function of viral envelope protein, gp70. The envelope determines which cells the virus will enter. gp70 comes in three different flavors for gene therapy. A fourth one 10A1 is still experimental.

1. Ectotropic (usually (MoMuLV) mouse and rat cells only (not human)
2. Amphotropic (from 4070A MuLV) most mammalian cells (but not hamster)
3. Gibbon Ape Leukemia virus (GALV) many mammalian cells (including hamster)
4. 10A1 (MuLV) most mammalian cells (including hamster)

The second level of tropism is nuclear translocation and integration. This is defined by structural features of p30CA (but requires the full 160S nucleoprotein pre-integration complex, comprised of all the gag proteins and viral RNA and/or DNA). Naked DNA in the cytoplasm after retrovirus un-coating and reverse transcription is never seen.

The product of the FV-1 locus in murine cells interacts with p30CA, and can reduce the efficiency of translocation and integration (and thus apparent titer) 20-100 fold. Fortunately, the common Moloney-based packaging cells supply a p30CA form (NB tropic) that avoids this problem. The human equivalent of FV-1 has not yet been identified.

The third level of retrovirus tropism is determined by the transcriptional activity of the LTR (and/or internal promoter) in the transfected cell. In general, the Moloney (and MSV) LTR is active in most mammalian cell types, with the distinct exception of embryonic stem cells and teratocarcinoma cell lines (like F9), in which it is silenced. It is also potentially inhibited by E1A/p300 in 293 cells.

Ping-pong amplification is sometimes used to increase retrovirus vector titers, by co-culturing vector-producing ectotropic and amphotropic cell lines. This can increase vector titers 10 fold, but often at a heavy cost:

1. Frequent truncation, deletions, and point mutations may occur in the inserted cDNA.
2. You may generate helper virus if you are not using a safety-modified system.

III. OVERVIEW

Retrovirus particles are fragile. They are easily inactivated by 0.1% detergent, chloroform, phenol, 1% bleach, 70% ethanol, at 65°C for 30 min, pH <6.5 or >9.0, UV light, and autoclaving.

Simple high-speed centrifugation (100,000g x 90 min) produces enough hydrodynamic shear to strip many virions of their gp70, and thus infectivity (although reverse transcriptase activity is preserved).

Virus can be stored in culture medium (with 10% serum) at -70oC indefinitely. One freeze-thaw cycle reduces the titer about 2-3 fold compared to the fresh virus. The second freeze-thaw drops the titer another 5-10 fold. **Aliquot your virus for storage at -70°C.**

When filter sterilizing retrovirus, be sure to use non-detergent treated 0.22 or 0.45 um filters. Any trace of detergent will strip virus envelope and reduce your titers. Filter before freezing, and not after in order to avoid looses due to aggregation.

All murine retrovirus vectors produced in either mouse cells (like the NIH 3T3-based packaging cell lines) or primate cells (COS and 293) are rapidly inactivated by human serum complement, with kill kinetics of 2-3 logs in 5 min at 37oC. Human C1q initiates the cascade by binding p15ETM at the virion surface. This is an antibody-independent process.

Murine retroviruses are heat labile. They have an infectious half-life of only 6 h in culture medium at 4°C.

OUTLINE OF RETROMAX PROCEDURE

Day 0 Seed 293 cells and grow overnight.

Day 1 Transfect with retroviral vector containing gene of interest and an appropriate packaging vector.

Day 2 Replace medium.

Day 3 Harvest virus-containing supernatant. Virus may be stored at -70°C at this stage. Infect target cells,either for titer determination or for gene expression.

Day 4 Split infected target cells and grow for selecting stable virus-producing cell lines. For transient expression experiments, you may harvest the cells at this stage.

Day 5 Start selection by replacing the medium with G418 containing medium.

Day 9 Change medium and continue selection.

Day 14 Count antibiotic resistant colonies and calculate titer.

Note: If you are using retroviral expression system for the first time, we strongly recommend using the LacZ control plasmid included in the kit. The β-galactosidase expression can be monitored using β-gal staining kit (Cat.#10053K) or any other standard protocol.

IV. PROTOCOL

One Day Before Transfection

1. Seed 1 x 106 293 cells in 6 cm tissue culture plates. This should yield a cell density of about 30% confluence on the day of the experiment.

2. Incubate overnight at 37°C in DMEM supplemented with 10% fetal bovine serum, 1% pen-strep.

TRANSFECTION OF 293 CELLS WITH RETROVIRAL VECTOR

Day 1

1. Add 0.25 ml of RetroMax transfection buffer (previously tested for optimum transfection efficiency) to the required number of sterile 15 ml polypropylene tubes. Lipofectamine may have certain advantages in reproducibility, but this has not been tested extensively by us for overall virus titers.

2. Dilute 2M CaCl2 to final concentration of 0.25 M in sterile distilled water (30 ul of 2 M CaCl2 and 220 ul of sterile water). Add the following to 1.5 ml sterile Eppendorf tube:

0.25 M CaCl2 - 30 µl
pCL-ECO, pCL-Ampho, or pCL-10A1 - 10 µg
Retroviral vector containing your gene - 10 µg
Mix by vortexing.

3. Add the DNA/CaCl2 mix drop-wise to the transfection buffer tubes (step 1) while lightly vortexing. Incubate at room temperature for 20 min.

4. During this incubation aspirate the transfection media from plates to be transfected and 2 ml DMEM containing 10% FBS/1% P/S and put back in the incubator until step 3 is done.

5. Add the DNA/CaPO4 mix drop-wise to 293 cells on 6 cm T.C. plates. Place in humidified CO2 incubator for 3-4 h. (Longer times may result in cells coming off the plates).

6. Carefully aspirate medium. Add 2 ml of warm PBS-15% Glycerol -no serum (glycerol shock medium) for 2 min. This step is optional. In some cases it may increase the transfection efficiency by 2-fold.

7. Aspirate glycerol shock medium. Carefully add 4 ml DMEM containing 10% FBS, 1% P/S along the side of the dish. Incubate for 12 h.

Culture vessel	Surface area/well (cm2)	Volume of plating medium	Transfection buffer (ml)	Packaging vector	Retro-vector	2M CaCl2(ul) and dil. vol (ul)
6 well	10	2ml	0.125	5 ug	5 ug	15 ul + 110 ul
6 cm	20	4ml	0.25	10ug	10 ug	30 ul + 220 ul
10 cm	60	10ml	0.5	20ug	20 ug	60 ul + 440 ul

Day 2

1. Aspirate medium and add fresh medium in the morning and incubate for 24 to 72 hrs.

Day 3 **(24 h after addition of fresh medium).**

1. Filter sterilize (0.45 mm syringe filters are convenient) the virus-containing supernatant to remove any cells in suspension. The virus can now be used directly, or stored at -70oC until needed.

2. Infect the desired target cells with 1 ml to 4 ml of 293 supernatant in 8 ug/ml Polybrene. The amount of supernatant you use depends on whether you are titering virus or want to infect the maximum number of target cells possible. Do not forget the polybrene. Omission of polybrene will drop your apparent titers 100-1000 fold.

DETERMINING THE VIRAL TITER

Remember that for titering, you must dilute the transfected supernatant at least 50 fold to stay in the linear part of the dilution curve. If you just want the maximum number of cells infected, then as little as a 2-fold dilution (equal volume mix) with the medium of the intended target cells is usually enough to prevent significant cell cycle inhibition.

1. For tittering, prepare serial dilutions (four 10-fold dilutions) of vector supernatant in order to be sure that you are in the linear part of the titration curve (ie, out of the Poisson region). Infections for accurate titering must be done at effective MOI is **0.1**. Target cells must be growing exponentially and only 30-50% confluent for maximum infection efficiencies.

2. Total virus-cell contact time should be a minimum of 12-24 h. This is because cycling cells are continuously entering and exiting the window of infectability. Even though the infective half life of the murine retrovirus particle is just 6-8 h at 37oC the rate of new cells entering the window is greater for the first 24 h, so longer contact times means more infected target cells.

3. Always test your titers on a standard control cell line (we use NIH 3T3) in parallel with infections of other desired target cells. Intrinsic infectability of many target cells can vary widely from 0.01-100% of the titers on NIH 3T3 cells.

   - Virus titers on NIH 3T3 cells for empty RetroMax vectors are typically 2-3 x 10^6 CFU/ml for ecotropic virus and 1 x 106 for amphotropic virus, assuming a typical 293 transfection efficiency of 30-50%.

   - When tittering virus on NIH 3T3 cells, infect 2 x 10^5 cells on a 6 cm plate (in 4 ml medium), overnight (16 h) with 1, 3, and 10 ml of pCL vector supernatant. You will need larger volumes for lower titer vectors, or cells that are more refractory to infection than NIH 3T3.

   - If virus stock is limiting: the most efficient use can be made by using 0.5-1 ml volumes to serially infect target cells in 6 cm plates (or 2-3 ml in 10 cm plates), and adding fresh virus every 4-6 h for 3-4 infection cycles. Continuous exposure to virus for about 24 hr is necessary in order to ensure that all cells have cycled through their receptivity window (S-G2) for retroviral infection. Be sure to add polybrene to 8 ug/ml.

4. Check your transfection efficiency by drawing a 1 cm square on the bottom of the plate of transfected 293 cells. Scrape harvest all the cells outside of this square (if desired) for RNA or protein analysis (CAT assays, ONPG-LacZ, Westerns, Northerns, Hirts, etc.) Fix and stain the transfected cells remaining inside the 1 cm square with X-Gal to determine the transfection efficiency (TXE). Typical transfection efficiencies are 30-50% in this subline of 293 cells. The same DNA and reagents will give TXEs of 2-15% on COS cells.

SELECTION FOR STABLE VIRUS-PRODUCING CELL LINES

Day 4 **(12-24 h after infection)**

1. If using a vector that confers G418 resistance, split the infected target cells at various dilutions (1:20 to 1:200) into 10 cm T.C. plates. A 1:20 dilution is about 105 NIH 3T3 cells. If 0.1% of the cells were infected, you will get about 100 colonies after 8-12 days of selection.

When infecting primary cells:

Accurate titers cannot be obtained when infecting primary fibroblasts, bone marrow or tumor cells because these cell types display density-dependent growth and typically have low plating efficiencies of 0.01%. This means that if 1000-10,000 cells are plated, only 1-100 colonies will actually clone out, *even if they are all infected and G418-resistant.* Therefore when infecting these cells, do not split them more than they will tolerate and only if they are >80% confluent (this is usually only a 1:2 to 1:4 dilution).

If you are selecting primary cells in G418, you will need to trypsinize and concentrate the cells by replating on sequentially smaller dishes until sufficient G418-resistant cells have grown out that you can begin expanding the infected pool of cells. This process can take 2 weeks. Effective titers for a particular primary cell type and vector will be a constant percentage of the titer observed on NIH 3T3 cells.

If using vectors that do not confer antibiotic resistance (like LacZ or GFP), simply change the medium today. Primary bone marrow cells should always be infected by co-cultivation of autochthonous stromal cells and virus producer cells in the presence of IL-3 (or WEHI-conditioned medium) and GM-CSF (a potent stromal cell growth factor). **Never select them in G418.**

Day 5 **(2 days after infection)**

1. Begin selection of cells infected with virus vectors conferring antibiotic resistance by adding 100 ml of a 100x stock to a 10 cm dish containing 10 ml of medium.

   The correct concentration of G418 (or any antibiotic) varies widely for different cell types. You must determine the concentration empirically. For NIH 3T3 cells this is 400-1000 mg/ml (active) G418. For other cell types, the right concentration is that which results no observable death at Day 2 and about-30-50% on Day 4. Complete G418 selection is usually achieved in 7-10 days.

2. If using a virus vector that does not contain a selectable marker (e.g., pCL-LacZ, MFG-GM-CSF, GFP), or if you would like an rapid assessment of gene expression in the infected target cells (for vectors expressing CAT, Luciferase, GFP, or LacZ), this can be tested today: b-gal staining of fixed cells in situ, (you can calculate the LacZ titer of your virus from this); CAT, Luciferase, or ONPG assays are done from cell lysates.

3. Because of the natural kinetics of retroviral infection, integration, and expression, no selection pressure (antibiotics) or assessment of gene expression should be made until 48 h after infection, i.e., if cells are infected on Day 3, gene expression cannot be accurately tested until Day 5.

Day 9 **(4 days after starting selection).**

1. Add fresh medium (and antibiotic) to cells under selection.

2. If infected cells were primary fibroblasts or primary tumor cells, you may need to increase the cell density (that has fallen due the death of uninfected cells under selection) by one of two methods, in order to avoid cell death due to densities falling below that tolerated by your particular primary cell type: concentrate the infected cells by trypsinization and plating on a smaller dish, or add uninfected primary cells (of the same type) to bring the density up to 50%, and continue selection. You must let the added (non-G418 resistant) cells attach to the plates for 3-4 h before adding G418 again.

3. Most primary cells will not grow as isolated clones because of density-dependent growth requirements. Attempts to pick clones frequently result in the loss of all infected cells.

Day 14 **(10-13 days after infection)**

1. Count the antibiotic resistant colonies, and calculate the titer (e.g., Neo titer) in your virus supernatants.

Example: Let us say you count 125 G418-resistant colonies on a 10 cm plate. If you infected (5×10^5) NIH 3T3 cells with 1 ml of virus supernatant, then split out the infected cells 1:20, your calculated titer is 125 x 1000 x 20 $=2.5 \times 10^6$ CFU/ml.

Note: *Many cDNAs of interest may have either cytostatic or cytotoxic effects on infected cells, so that stable colony formation under G418 selection does not actually reflect the true number of cells initially infected. Only growing cells make colonies.*

V. MAXIMIZING RETROVIRUS TITERS

1. The principal determinant of retrovirus titer is the abundance of packageable RNA, and not the abundance of viral proteins. Viral pro teins are typically made in 20 fold stoichiometric excess. In fact, too much gp85 env can actual lower your titers because of impaired glyco protein processing and assembly.

2. The RetroMax (pCL) system generates the highest abundance of packageable viral RNA of any known transient system by exploiting the power of the CMV IE enhancer-promoter in E1A-expressing 293 cells. The natural enhancer of the unmodified MuLV LTR is inhibited by E1A-p300 in 293 cells, so attempts to use non-pCL retroviral vectors in 293 cells will yield 20-50 fold lower titers, even with the same transfection efficiencies.

3. If you are studying cDNAs that do not have cytostatic or cytotoxic phenotypes, it may be possible to generate higher titer virus using traditional retrovirus packaging cells. This process takes 2 months (instead of 2 days for pCL). The highest titers are always obtained from stably infected (not transfected), cloned (not pooled) packaging cell lines. This is because transfected sequences are often inactivated by methylation, and because pro-virus integration position effects can influence gene expression from the same retrovirus vector in different clones of infected cells can vary over a 100 fold range (i.e., integration into heterochromatic regions of the genome gives poor expression, while integration into euchromatic regions gives high expression).

4. In deciding whether to go through the process of selecting and characterizing clones of packaging cells or simply preparing virus by the rapid pCL system, one must consider the intended applications. If you need a rapid test for the stable expression properties of a battery of mutant cDNAs that you have prepared, the pCL system is often adequate, or in the case of cytostatic and cytotoxic cDNAs, it is often the only way to produce usable amounts of virus.

   Sometimes producing the virus (with a toxic or static cDNA) in cells from a different species can overcome the titer problems that result from cell growth inhibition.

   If on the other hand, you plan to use the virus produced as a reagent that you can go back to many times over the next few years, then you need to pick clones of stable packaging cells.

5. pCL vectors reproducibly produce titers of 0.5-5 x 106 CFU/ml with good transfections, independent of phenotype and size (less than 4 kb) of the cDNA.

6. Typical retrovirus titers from cloned packaging cells are 104-106 CFU/ml (sometimes you can get 107), depending profoundly on the size and toxic properties of the cDNA expressed in these mouse fibrob last cell lines. cDNAs that are 2-4 kb long lead to modest reductions in titer because of packaging constraints. **cDNAs larger than 4 kb are subject to frequent spontaneous deletions and truncation during retroviral reverse transcription, and show large reductions in virus titers, and frequent non-expressing clones.**

Scaling Up:

1. Transfect 10 cm plates of 293 cells with 30-40 mg of pCL vector containing your gene of interest in 1 ml of CaCl2-HBS.

2. Replace the medium on Day 2.

3. Harvest and replace the medium every 24 h on Days 3, 4, and 5. This should give you 30 ml of virus supernatant from each transfected plate. The titers in supernatants harvested on Days 3 and 4 are equivalent. We suspect that Day 5 will be almost the same.

VI. THE SAFE USE OF MURINE RETROVIRUS VECTORS AND SAFETY PRECAUTIONS

Replication competent retroviruses (RCR) are called helper virus, or simply "Helper".

They require 3 trans- (gag, pol, and env), and 7 major, cis-active control elements (U3, R, U5, PBS, SD, y, and SA) in order to replicate.

The most common retrovirus vectors are based on the Moloney Murine Leukemia Virus (MoMuLV), encoding only the 7 cis elements.

These vectors are defective and can not replicate without picking up 7.1 kb of sequence by homologous recombination with a helper genome (while simultaneously deleting your cDNA). Modern vectors are now "safety modified" by including a stop mutation early in "gag" (or a frame-shift) that pre-

vents gag translation and limits the sequence window available for productive recombination with helper genomes.

Packaging cells supply the 9 processed proteins encoded by gag, pol, and env (p15MA, p12 p30CA, p10NC, p14PRO, p85RT, p40IN, gp70SU, and p15ETM) necessary for virion assembly.

Modern packaging cells are safety-modified by dividing the gag-pol genes, and the env gene on two separate plasmids. These two plasmids are serially transfected (not co-transfected) into NIH 3T3 cells. The resulting safety modifications yield the modern split genome packaging cells.

Current evidence suggests that in order to initiate a pathogenic infection in primates with amphotropic murine retroviral vectors, three requirements must be met:

1. The infected host must be immunocompromised.
2. The vector preparation must contain helper virus.
3. Direct body fluid contact, e.g., intravenous inoculation is required for transfer.

However, for safe use of the RetroMax system, the user is strongly advised to follow the following guidelines:

1. According to NIH guidelines all retroviral production and transduction work must be done in a Biosafety Level 2 (BL2) facility.
2. Work in laminar flow, HEPA filtered hoods that receive annual maintenance and recertification.
3. Use sterile technique (flaming is not necessary and not recommended because of convection disturbances to airflow patterns).
4. Aspirate all liquid waste into flasks containing 5-10% (v/v) of a microbiocidal agent.
5. Discard spent plasticware in biohazard bags and autoclave before discarding.
6. Dispose spent glassware in detergent containers for cleaning and autoclaving.
7. Clean all surfaces with 70% ethanol at the end of the work.
8. Switch on the UV light.

Note: Retroviruses are not spread by aerosols.

VI. REFERENCES

1. Naviaux RK, Costanzi E, Haas M, and Verma I. The pCL vector system: Rapid production of helper-free, high titer, recombinant retroviruses. J. Virol 70: 5701-5705 (1996).
2. Cornetta K, Blaese RM, Anderson WF. Amphotropic leukemia retrovirus is not an acute pathogen for primates. Human Gene Therapy, 1: 15-30 (1990).
3. Naviaux RK and Verma IM. Retroviral vectors for persistent expression in vivo. Curr. Opin. Biotechnol. 3: 540-547 (1992).
4. Miller AD, Miller DG, Garcia JV, and Lynch C. Use of retroviral vectors for gene transfer and expression. Methods in Enzymology 217: 581-599 1993).
5. Vanin EF, Kaloss M, Broscius C., and Nienhauis AW. Characterization of replication-competent retroviruses from nonhuman primates with virus-induced T-cell lymphomas and observations regarding the mechanism of oncogenesis. J Virol. 68: 4241-4250 (1994).
6. Ott D, Friedrich R and Rein A. Sequence analysis of amphotropic and 10A1 murine leukemia viruses: close relationship to mink cell focus-inducing viruses. J. Virol. 64: 757-766 (1990).

VII. APPENDIX

A. Expression Vectors

Choice of Vectors

The RetroMax expression vectors are designed to maximize recombinant-retrovirus titers in a simple, efficient, and flexible experimental system. All members of the RetroMax expression vector family (pCLXSN, pCLNCX, pCLNRX, and pCLNDX) have an extended packaging signal (y+) and are derived from safety-modified retrovirus vectors in which the gag open reading frame has been stopped by a point mutation (1), thereby minimizing the opportunity for replication competent retrovirus production by recombination with packaging genome. Four expression vectors are provided in the kit. Clone your gene of interest into one of these vectors:

Schematic Diagram of pCL Vectors

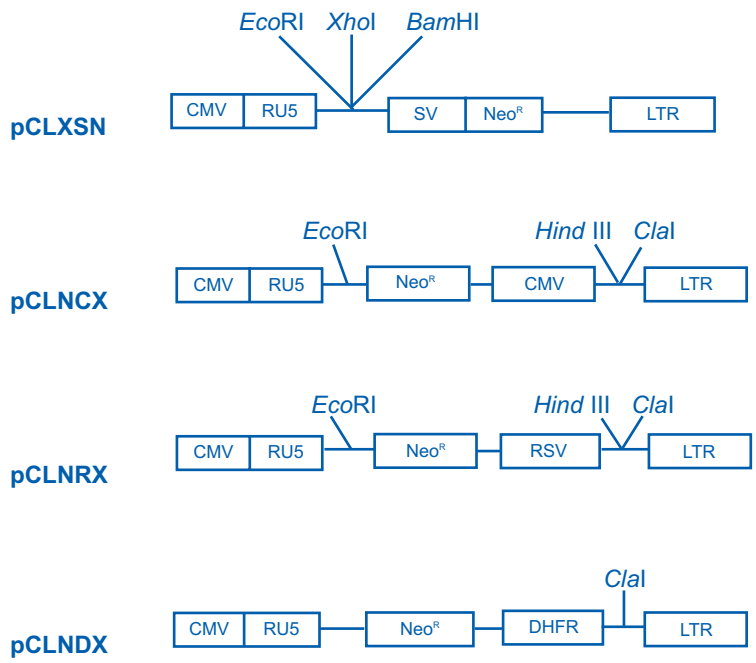

PCLXSN Retrovirus Expression Vector

Catalog No.: 10041P

Quantity: 10 µg in 20 µl 1x TE (10 mM Tris, pH 7.5, 1 mM EDTA)

The inserted cDNA is under the control of LTR. The gene of interest can be cloned in *Eco* RI, *Xho* I and Bam HI cloning sites. In this case permanent cell lines can be selected. The complete vector sequence is available online at www.imgenex.com.

Schematic presentation of pCLXSN vector

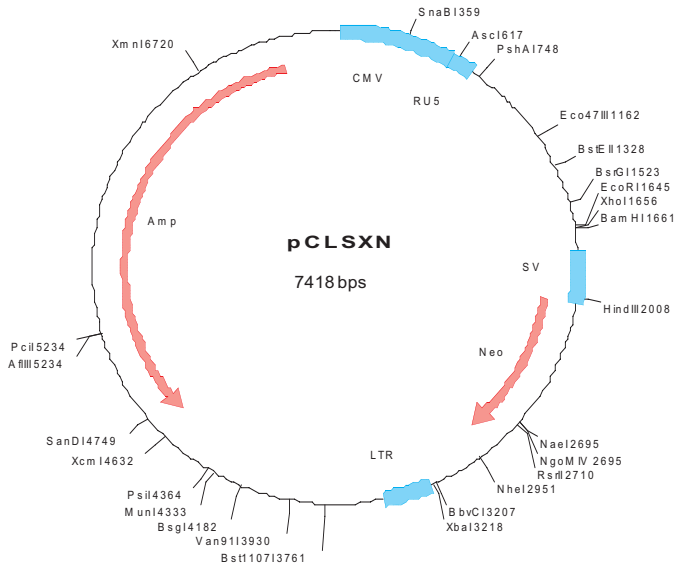

CMV immediate early enhancer-promoter allows high-efficiency transcription in 293 cells. However, this is lost during viral replication. Hence, the gene of interest cloned into Eco RI, Xho I, or Bam HI cloning site is driven by Moloney MLV and murine sarcoma virus LTR (RU5).

pCLNCX Retrovirus Expression Vector

Catalog No.: 10042P

Quantity: 10 µg in 20 µl 1x TE (10 mM Tris, pH 7.5, 1 mM EDTA)

The gene of interest is cloned into *Hind* III and *Cla* I sites and is expressed under CMV promoter control. A second gene can be cloned into *Eco*RI site located upstream of the Neo^R gene. However, in this case permanent cell lines can not be selected. Combined size of two inserts should not be more than 4 kb. The complete vector sequence is available online at www.imgenex.com.

Schematic presentation of pCLNCX vector

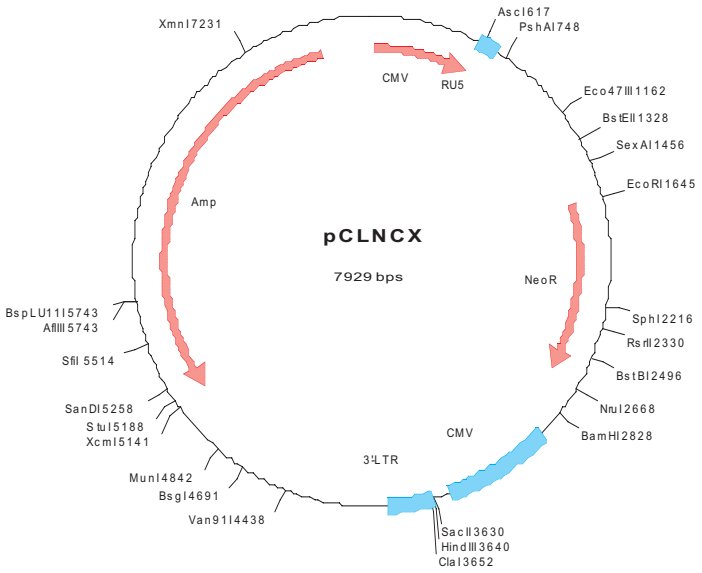

CMV immediate early promoter/enhancer allows high-efficiency transcription in 293 cells. However, this is lost during viral replication. Hence, the gene of interest cloned into Eco RI cloning site is driven by Moloney MLV and murine sarcoma virus LTR (RU5). However, in this case Neor gene will not be expressed. For expression under the control of CMV early promoter/enhancer, the gene of interest should be cloned into Hind III or Cla I site.

pCLNRX Retrovirus Expression Vector

Catalog No.: 10043P

Quantity: 10 µg in 20 µl 1x TE (10 mM Tris, pH 7.5, 1 mM EDTA)

Similar to the pCLNCX vector, it differs only in that the foreign gene is cloned downstream of RSV promoter into *Hind*III or *Cla*I. A second gene can be cloned into *Eco*RI site located upstream of the Neo^R gene. However, in this case permanent cell lines can not be selected. Combined size of two inserts should not be more than 4 kb. The complete vector sequence is available online at www.imgenex.com.

Schematic presentation of pCLNRX vector

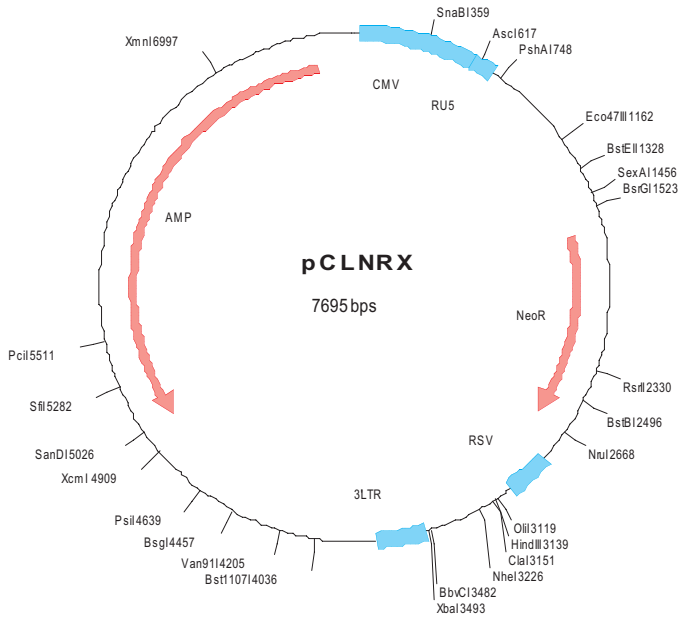

CMV immediate early promoter/enhancer allows high-efficiency transcription in 293 cells. However, this is lost during viral replication. Hence, the gene of interest cloned into Eco RI cloning site is driven by Moloney MLV and murine sarcoma virus LTR (RU5). However, in this case Neo^R gene will not be expressed. For expression under the control of RSV the gene of interest should be cloned into Hind III or Cla I site.

pCLNDX Retrovirus Expression Vector

Catalog No.: 10044P

Quantity: 10 µg in 20 µl 1x TE (10 mM Tris, pH 7.5, 1 mM EDTA)

The gene of interest can be cloned into the single cloning site, *Cla* I, which puts it under the control of the DHFR promoter. However, in this case permanent cell lines can not be selected. The complete vector sequence is available online at www.imgenex.com.

Schematic presentation of pCLNDX vector

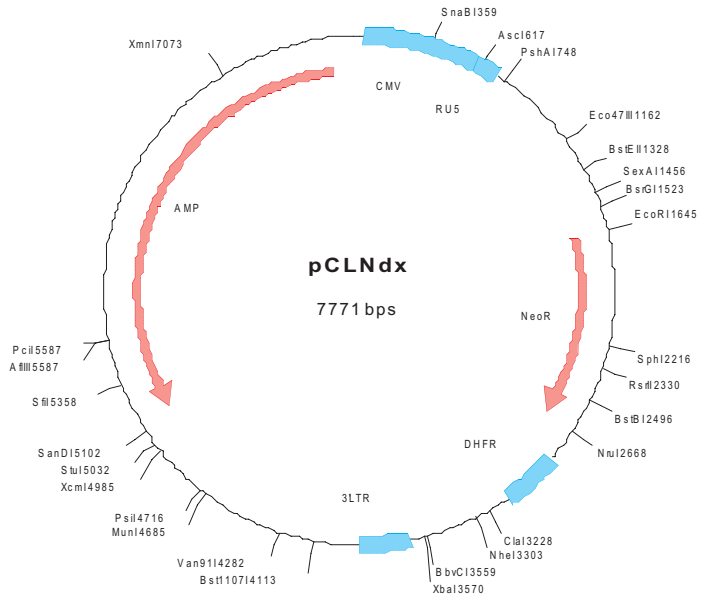

CMV immediate early promoter/enhancer allows high-efficiency transcription in 293 cells. However, this is lost during viral replication. Hence, the gene of interest cloned into Eco RI cloning site is driven by Moloney MLV and murine sarcoma virus LTR (RU5). However, in this case Neo^R gene will not be expressed. For expression under the control of DHFR the gene of interest should be cloned into Cla I site.

B. Packaging Vectors

The pCL packaging vectors is a part of the RetroMax Expression System (Cat#10040K and 10041K) and has been designed to maximize recombinant-retrovirus titers in a simple, efficient, and flexible experimental system. By introducing a retroviral vector into a cell expressing retroviral proteins, retroviral particles (virions) are shed into the culture medium at the rate of about 1 infectious particle/cell/day. Retrovirus tropism is determined at 3 levels. The first is simply a function of viral envelope protein, gp70. The envelope determines which cells the virus will enter. gp70 comes in three different flavors for gene therapy. Retroviruses obtained by co-transfection with pCL-Eco vector will infect mouse and rat cells, but not human cells.

Sequencing information is not available for any of our packaging vectors.

Schematic presentation of pCL-Eco packaging vector

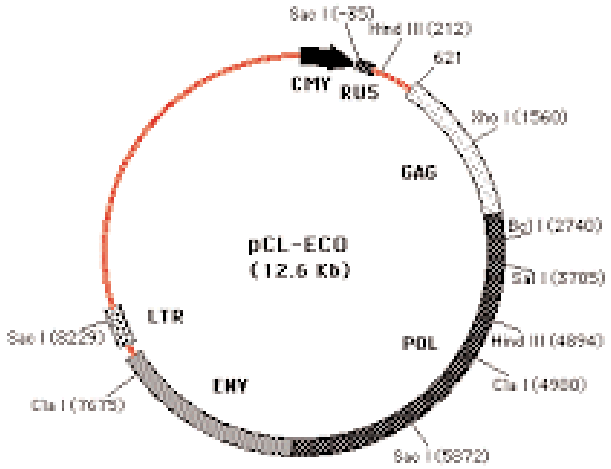

The gene coding for envelope protein was replaced with envelop gene from 4070A and 10A1 strain of MuLV to create pCL-Ampho and pCL-10A1 packaging vectors, respectively.

pCL-Eco Retrovirus Packaging Vector

Catalog No.: 10045P

Quantity: 20 µg in 20 µl 1x TE (10 mM Tris, pH 7.5, 1 mM EDTA)

Ectotropic (usually) (MoMuLV)	Mouse and rat cells only (not human)

pCL-Ampho Retrovirus Packaging Vector

Catalog No.: 10046P

Quantity: 20 µg in 20 µl (10 mM Tris, pH 7.5, 1 mM EDTA)

Amphotropic (from 4070A MuLV)	Most mammalian cells (but not hamster)

pCL-10A1 Retrovirus Packaging Vector

Catalog No.: 10047P

Quantity: 20 µg in 20 µl (10 mM Tris, pH 7.5, 1 mM EDTA)

10A1 (MuLV)	Most mammalian cells (including hamster)

Storage:
For long-term storage, store the Packaging at -20°C.

References:
1. Naviaux, RK, Costanzi, E, Haas, M and Verma, I. The pCL vector system: Rapid production of helper-free, high titer, recombinant retoviruses. J. Virol 70: 5701-5705 (1996).

Note: *Packaging Vectors are for research use only. Not for use in humans. Use of this by commercial entities for any commercial purpose requires the user to obtain a commercial license.*

C. LacZ Retroviral Reporter Vector

pCL-MFG-LacZ Retrovirus Reporter Vector

Catalog No.: 10048P

Quantity: 20 μg in 20 μl (10 mM Tris, pH 7.5, 1 mM EDTA)

Sequencing information is not available for any of our packaging vectors.

Background:

The pCL-MFG-LacZ reporter vector is a part of the RetroMax expression system (Cat#10040K and 10041K) and has been designed to assay beta-galactosidase activity. This plasmid has an ampicillin resistance gene and should be grown in LB-ampicillin media before use.

IMGENEX also provides Beta-Galactosidase Staining Kit (Catalog no: 10053K) as well as Beta-Galatosidase Quantitation Kit (Catalog no: 10054K).

Storage:
For long-term storage, store at -20°C.

References:
1. Naviaux, RK, Costanzi, E, Haas, M and Verma, I. The pCL vector system: Rapid production of helper-free, high titer, recombinant retro viruses. J. Virol 70: 5701-5705 (1996).

Note: *For research use only. Not for use in humans. Use of this by commercial entities for any commercial purpose requires the user to obtain a commercial license.*

D. Nucleotide Sequence

Nucleotide Sequence pCLXSN

CGCGTTGACATTGATTATTGACTAGTTATTAATAGTAATCAATTACGGGGTCATTAGTTC
ATAGCCCATATATGGAGTTCCGCGTTACATAACTTACGGTAAATGGCCCGCCTGGCTGAC
CGCCCAACGACCCCCGCCCATTGACGTCAATAATGACGTATGTTCCATAGTAACGCCAAT
AGGGACTTTCCATTGACGTCAATGGGTGGACTATTTACGGTAAACTGCCCACTTGGCAGT
ACATCAAGTGTATCATATGCCAAGTACGCCCCCTATTGACGTCAATGACGGTAAATGGCC
CGCCTGGCATTATGCCCAGTACATGACCTTATGGGACTTTCCTACTTGGCAGTACATCTA
CGTATTAGTCATCGCTATTACCATGTGATGCGGTTTTGGCAGTACATCAATGGGCGTGGA
TAGCGGTTTGACTCACGGGGATTTCCAAGTCTCCACCCCATTGACGTCAATGGGAGTTTG
TTTTGGCACCAAAATCAACGGGACTTTCCAAAATGTCGTAACAACTCCGCCCCATTGACG
CAAATGGGCGGTAGGCGTGTACGGTGGGAGGTCTATATAAGCAGAGCTCAATAAAAGAGC
CCACAACCCCTCACTCGGCGCGCCAGTCTTCCGATAGACTGCGTCGCCCGGGTACCCGTA
TTCCCAATAAAGCCTCTTGCTGTTTGCATCCGAATCGTGGTCTCGCTGTTCCTTGGGAGG
GTCTCCTCTGAGTGATTGACTACCCACGACGGGGGTCTTTCATTTGGGGGCTCGTCCGGG
ATTTGGAGACCCCTGCCCAGGGACCACCGACCCACCACCGGGAGGTAAGCTGGCCAGCAA
CTTATCTGTGTCTGTCCGATTGTCTAGTGTCTATGTTTGATGTTATGCGCCTGCGTCTGT
ACTAGTTAGCTAACTAGCTCTGTATCTGGCGGACCCGTGGTGGAACTGACGAGTTCTGAA
CACCCGGCCGCAACCCTGGGAGACGTCCCAGGGACTTTGGGGGCCGTTTTTGTGGCCCGA
CCTGAGGAAGGGAGTCGATGTGGAATCCGACCCCGTCAGGATATGTGGTTCTGGTAGGAG
ACGAGAACCTAAAACAGTTCCCGCCTCCGTCTGAATTTTTGCTTTCGGTTTGGAACCGAA
GCCGCGCGTCTTGTCTGCTGCAGCGCTGCAGCATCGTTCTGTGTTGTCTCTGTCTGACTG
TGTTTCTGTATTTGTCTGAAAATTAGGGCCAGACTGTTACCACTCCCTTAAGTTTGACCT
TAGGTCACTGGAAAGATGTCGAGCGGATCGCTCACAACCAGTCGGTAGATGTCAAGAAGA
GACGTTGGGTTACCTTCTGCTCTGCAGAATGGCCAACCTTTAACGTCGGATGGCCGCGAG
ACGGCACCTTTAACCGAGACCTCATCACCCAGGTTAAGATCAAGGTCTTTTCACCTGGCC
CGCATGGACACCCAGACCAGGTCCCCTACATCGTGACCTGGGAAGCCTTGGCTTTTGACC
CCCCTCCCTGGGTCAAGCCCTTTGTACACCCTAAGCCTCCGCCTCCTCTTCCTCCATCCG
CCCCGTCTCTCCCCCTTGAACCTCCTCGTTCGACCCCGCCTCGATCCTCCCTTTATCCAG
CCCTCACTCCTTCTCTAGGCGCCGGAATTCGTTAACTCGAGGATCCGGCTGTGGAATGTG
TGTCAGTTAGGGTGTGGAAAGTCCCCAGGCTCCCCAGCAGGCAGAAGTATGCAAAGCATG
CATCTCAATTAGTCAGCAACCAGGTGTGGAAAGTCCCCAGGCTCCCCAGCAGGCAGAAGT
ATGCAAAGCATGCATCTCAATTAGTCAGCAACCATAGTCCCGCCCCTAACTCCGCCCATC
CCGCCCCTAACTCCGCCCAGTTCCGCCCATTCTCCGCCCCATGGCTGACTAATTTTTTTT
ATTTATGCAGAGGCCGAGGCCGCCTCGGCCTCTGAGCTATTCCAGAAGTAGTGAGGAGGC
TTTTTTGGAGGCCTAGGCTTTTGCAAAAAGCTTGGGCTGCAGGTCGAGGCGGATCTGATC
AAGAGACAGGATGAGGATCGTTTCGCATGATTGAACAAGATGGATTGCACGCAGGTTCTC
CGGCCGCTTGGGTGGAGAGGCTATTCGGCTATGACTGGGCACAACAGACAATCGGCTGCT
CTGATGCCGCCGTGTTCCGGCTGTCAGCGCAGGGGCGCCCGGTTCTTTTTGTCAAGACCG
ACCTGTCCGGTGCCCTGAATGAACTGCAGGACGAGGCAGCGCGGCTATCGTGGCTGGCCA
CGACGGGCGTTCCTTGCGCAGCTGTGCTCGACGTTGTCACTGAAGCGGGAAGGGACTGGC
TGCTATTGGGCGAAGTGCCGGGGCAGGATCTCCTGTCATCTCACCTTGCTCCTGCCGAGA
AAGTATCCATCATGGCTGATGCAATGCGGCGGCTGCATACGCTTGATCCGGCTACCTGCC
CATTCGACCACCAAGCGAAACATCGCATCGAGCGAGCACGTACTCGGATGGAAGCCGGTC
TTGTCGATCAGGATGATCTGGACGAAGAGCATCAGGGGCTCGCGCCAGCCGAACTGTTCG
CCAGGCTCAAGGCGCGCATGCCCGACGGCGAGGATCTCGTCGTGACCCATGGCGATGCCT
GCTTGCCGAATATCATGGTGGAAAATGGCCGCTTTTCTGGATTCATCGACTGTGGCCGGC
TGGGTGTGGCGGACCGCTATCAGGACATAGCGTTGGCTACCCGTGATATTGCTGAAGAGC
TTGGCGGCGAATGGGCTGACCGCTTCCTCGTGCTTTACGGTATCGCCGCTCCCGATTCGC
AGCGCATCGCCTTCTATCGCCTTCTTGACGAGTTCTTCTGAGCGGGACTCTGGGGTTCGA
TAAAATAAAAGATTTTATTTAGTCTCCAGAAAAAGGGGGGAATGAAAGACCCCACCTGTA
GGTTTGGCAAGCTAGCTTAAGTAACGCCATTTTGCAAGGCATGGAAAAATACATAACTGA

GAATAGAGAAGTTCAGATCAAGGTCAGGAACAGATGGAACAGCTGAATATGGGCCAAACA
GGATATCTGTGGTAAGCAGTTCCTGCCCCGGCTCAGGGCCAAGAACAGATGGAACAGCTG
AATATGGGCCAAACAGGATATCTGTGGTAAGCAGTTCCTGCCCCGGCTCAGGGCCAAGAA
CAGATGGTCCCCAGATGCGGTCCAGCCCTCAGCAGTTTCTAGAGAACCATCAGATGTTTC
CAGGGTGCCCCAAGGACCTGAAATGACCCTGTGCCTTATTTGAACTAACCAATCAGTTCG
CTTCTCGCTTCTGTTCGCGCGCTTCTGCTCCCCGAGCTCAATAAAAGAGCCCACAACCCC
TCACTCGGGGCGCCAGTCCTCCGATTGACTGAGTCGCCCGGGTACCCGTGTATCCAATAA
ACCCTCTTGCAGTTGCATCCGACTTGTGGTCTCGCTGTTCCTTGGGAGGGTCTCCTCTGA
GTGATTGACTACCCGTCAGCGGGGGTCTTTCATTTGGGGGCTCGTCCGGGATCGGGAGAC
CCCTGCCCAGGGACCACCGACCCACCACCGGGAGGTAAGCTGGCTGCCTCGCGCGTTTCG
GTGATGACGGTGAAAACCTCTGACACATGCAGCTCCCGGAGACGGTCACAGCTTGTCTGT
AAGCGGATGCCGGGAGCAGACAAGCCCGTCAGGGCGCGTCAGCGGGTGTTGGCGGGTGTC
GGGGCGCAGCCATGACCCAGTCACGTAGCGATAGCGGAGTGTATACCTAGCTAGGTAGCT
AGAGGATCTTTGTGAAGGAACCTTACTTCTGTGGTGTGACATAATTGGACAAACTACCTA
CAGAGATTTAAAGCTCTAAGGTAAATATAAAATTTTTAAGTGTATAATGTGTTAAACTAC
TGATTCTAATTGTTTGTGTATTTTAGATTCCAACCTATGGAACTGATGAATGGGAGCAGT
GGTCCAATGCCTTTAATGAGGAAAACCTGTTTTGCTCAGAAGAAATGCCTCTAGTGATGA
TGAGGCTACTGCTGACTCTCAACATTCTACTCCTCCAAAAAAGAAGAGAAAGGTAGAAGA
CCCCAAGGACTTTCCTTCAGAATTGCTAAGTTTTTTGAGTCATGCTGTGTTTAGTAATAG
AACTCTTGCTTGCTTTGCTATTTACACCACAAAGGAAAAAGCTGCACTGCTATACAAGAA
AATTATGGAAAAATATTTGATGTATAGTGCCTTGACTAGAGATCATAATCAGCCATACCA
CATTTGTAGAGGTTTTACTTGCTTTAAAAAACCTCCCACACCTCCCCCTGAACCTGAAAC
ATAAAATGAATGCAATTGTTGTTGTTAACTTGTTTATTGCAGCTTATAATGGTTACAAAT
AAAGCAATAGCATCACAAATTTCACAAATAAAGCATTTTTTTCACTGCATTCTAGTTGTG
GTTTGTCCAAACTCATCAATGTATCTTATCATGTCTGATCAGCTTCAGAAGATGGCGGAG
GGCCTCCAACACAGTAATTTTCCTCCCGACTCTTAAAATAGAAAATGTCAAGTCAGTTAA
GCAGGAAGTGGACTAACTGACGCAGCTGGCCGTGCGACATCCTCTTTTAATTAGTTGCTA
GGCAACGCCCTCCAGAGGGCGTGTGGTTTTGCAAGAGGAAGCAAAAGCCTCTCCACCCAG
GCCTAGAATGTTTCCACCCAATCATTACTATGACAACAGCTGTTTTTTTTAGTATTAAGC
AGAGGCCGGGGACCCCTGGCCCGCTTACTCTGGAGAAAAAAAACATTGTAGAGGCTTCCA
GAGGCAACTTGTCAAAACAGGACTGCTTCTATTTCTGTCACACTGTCTGGCCCTGTCACA
AGGTCCAGCACCTCCATACCCCCTTTAATAAGCAGTTTGGGAACGGGTGCGGGTCTTACT
CCGCCCATCCGCCCCTAACTCCGCCCAGTTCCGCCCATTCTCCGCCCCATGCTGACTAAT
TTTTTTTATTTATGCAGAGGCCGAGGCCGCCTCGGCCTCTGAGCTATTCCAGAAGTAGTG
AGGAGGCTTTTTTGGAGGCTGCATTAATGAATCGGCCAACGCGCGGGGAGAGGCGGTTTG
CGTATTGGGCGCTCTTCCGCTTCCTCGCTCACTGACTCGCTGCGCTCGGTCGTTCGGCTG
CGGCGAGCGGTATCAGCTCACTCAAAGGCGGTAATACGGTTATCCACAGAATCAGGGGAT
AACGCAGGAAAGAACATGTGAGCAAAAGGCCAGCAAAAGGCCAGGAACCGTAAAAAGGCC
GCGTTGCTGGCGTTTTTCCATAGGCTCCGCCCCCCTGACGAGCATCACAAAAATCGACGC
TCAAGTCAGAGGTGGCGAAACCCGACAGGACTATAAAGATACCAGGCGTTTCCCCCTGGA
AGCTCCCTCGTGCGCTCTCCTGTTCCGACCCTGCCGCTTACCGGATACCTGTCCGCCTTT
CTCCCTTCGGGAAGCGTGGCGCTTTCTCATAGCTCACGCTGTAGGTATCTCAGTTCGGTG
TAGGTCGTTCGCTCCAAGCTGGGCTGTGTGCACGAACCCCCCGTTCAGCCCGACCGCTGC
GCCTTATCCGGTAACTATCGTCTTGAGTCCAACCCGGTAAGACACGACTTATCGCCACTG
GCAGCAGCCACTGGTAACAGGATTAGCAGAGCGAGGTATGTAGGCGGTGCTACAGAGTTC
TTGAAGTGGTGGCCTAACTACGGCTACACTAGAAGGACAGTATTTGGTATCTGCGCTCTG
CTGAAGCCAGTTACCTTCGGAAAAAGAGTTGGTAGCTCTTGATCCGGCAAACAAACCACC
GCTGGTAGCGGTGGTTTTTTTGTTTGCAAGCAGCAGATTACGCGCAGAAAAAAAGGATCT
CAAGAAGATCCTTTGATCTTTTCTACGGGGTCTGACGCTCAGTGGAACGAAAACTCACGT
TAAGGGATTTTGGTCATGAGATTATCAAAAAGGATCTTCACCTAGATCCTTTTAAATTAA
AAATGAAGTTTTAAATCAATCTAAAGTATATATGAGTAAACTTGGTCTGACAGTTACCAA
TGCTTAATCAGTGAGGCACCTATCTCAGCGATCTGTCTATTTCGTTCATCCATAGTTGCC
TGACTCCCCGTCGTGTAGATAACTACGATACGGGAGGGCTTACCATCTGGCCCCAGTGCT
GCAATGATACCGCGAGACCCACGCTCACCGGCTCCAGATTTATCAGCAATAAACCAGCCA
GCCGGAAGGGCCGAGCGCAGAAGTGGTCCTGCAACTTTATCCGCCTCCATCCAGTCTATT
AATTGTTGCCGGGAAGCTAGAGTAAGTAGTTCGCCAGTTAATAGTTTGCGCAACGTTGTT

GCCATTGCTGCAGGCATCGTGGTGTCACGCTCGTCGTTTGGTATGGCTTCATTCAGCTCC
GGTTCCCAACGATCAAGGCGAGTTACATGATCCCCCATGTTGTGCAAAAAAGCGGTTAGC
TCCTTCGGTCCTCCGATCGTTGTCAGAAGTAAGTTGGCCGCAGTGTTATCACTCATGGTT
ATGGCAGCACTGCATAATTCTCTTACTGTCATGCCATCCGTAAGATGCTTTTCTGTGACT
GGTGAACTCAACCAAGTCATTCTGAGAATAGTGTATGCGGCGACCGAGTTGCTCTTGCCC
GGCGTCAATACGGGATAATACCGCGCCACATAGCAGAACTTTAAAAGTGCTCATCATTGG
AAAACGTTCTTCGGGGCGAAAACTCTCAAGGATCTTACCGCTGTTGAGATCCAGTTCGAT
GTAACCCACTCGTGCACCCAACTGATCTTCAGCATCTTTTACTTTCACCAGCGTTTCTGG
GTGAGCAAAAACAGGAAGGCAAAATGCCGCAAAAAAGGGAATAAGGGCGACACGGAAATG
TTGAATACTCATACTCTTCCTTTTTCAATATTATTGAAGCATTTATCAGGGTTATTGTCT
CATGAGCGGATACATATTTGAATGTATTTAGAAAAATAAACAAATAGGGGTTCCGCGCAC
ATTTCCCCGAAAAGTGCCACCTGACGTCTAAGAAACCATTATTATCATGACATTAACCTA
TAAAAATAGGCGTATCACGAGGCCCTTTCGTCTCGCGCGTTTCGGTGATGACGGTGAAAA
CCTCTGACACATGCAGCTCCCGGAGACGGTCACAGCTTGTCTGTAAGCGGATGCCGGGAG
CAGACAAGCCCGTCAGGGCGCGTCAGCGGGTGTTGGCGGGTGTCGGGGCTGGCTTAACTA
TGCGGCATCAGAGCAGATTGTACTGAGAGTGCACCATATGCGGTGTGAAATACCGCACAG
ATGCGTAAGGAGAAAATACCGCATCAGGCGCCATTCGCCATTCAGGCTGCGCAACTGTTG
GGAAGGGCGATCGGTGCGGGCCTCTTCGCTATTACGCC

CMV - 21-584
RU5 – 584 -700
SV- 1770-2030
NeoR – 2030- 2880
3’LTR- 3230 – 3471
AMP- 7135-4666C

Nucleotide Sequence pCLNCX

```
   1  cgcgttgaca ttgattattg actagttatt aatagtaatc aattacgggg tcattagttc
  61  atagcccata tatggagttc cgcgttacat aacttacggt aaatggcccg cctggctgac
 121  cgcccaacga cccccgccca ttgacgtcaa taatgacgta tgttccatag taacgccaat
 181  agggactttc cattgacgtc aatgggtgga ctatttacgg taaactgccc acttggcagt
 241  acatcaagtg tatcatatgc caagtacgcc ccctattgac gtcaatgacg gtaaatggcc
 301  cgcctggcat tatgcccagt acatgacctt atgggacttt cctacttggc agtacatcta
 361  cgtattagtc atcgctatta ccatgtgatg cggttttggc agtacatcaa tgggcgtgga
 421  tagcggtttg actcacgggg atttccaagt ctccacccca ttgacgtcaa tgggagtttg
 481  ttttggcacc aaaatcaacg ggactttcca aaatgtcgta acaactccgc cccattgacg
 541  caaatgggcg gtaggcgtgt acggtgggag gtctatataa gcagagctca ataaaagagc
 601  ccacaacccc tcactcggcg cgccagtctt ccgatagact gcgtcgcccg ggtacccgta
 661  ttcccaataa agcctcttgc tgtttgcatc cgaatcgtgg tctcgctgtt ccttgggagg
 721  gtctcctctg agtgattgac tacccacgac gggggtcttt catttggggg ctcgtccggg
 781  atttggagac ccctgcccag ggaccaccga cccaccaccg ggaggtaagc tggccagcaa
 841  cttatctgtg tctgtccgat tgtctagtgt ctatgtttga tgttatgcgc ctgcgtctgt
 901  actagttagc taactagctc tgtatctggc ggacccgtgg tggaactgac gagttctgaa
 961  cacccggccg caaccctggg agacgtccca gggactttgg gggccgtttt tgtggcccga
1021  cctgaggaag ggagtcgatg tggaatccga ccccgtcagg atatgtggtt ctggtaggag
1081  acgagaacct aaaacagttc ccgcctccgt ctgaattttt gctttcggtt tggaaccgaa
1141  gccgcgcgtc ttgtctgctg cagcgctgca gcatcgttct gtgttgtctc tgtctgactg
1201  tgtttctgta tttgtctgaa aattagggcc agactgttac cactccctta agtttgacct
1261  taggtcactg gaaagatgtc gagcggatcg ctcacaacca gtcggtagat gtcaagaaga
1321  gacgttgggt taccttctgc tctgcagaat ggccaacctt taacgtcgga tggccgcgag
1381  acggcacctt taaccgagac ctcatcaccc aggttaagat caaggtcttt tcacctggcc
1441  cgcatggaca cccagaccag gtcccctaca tcgtgacctg ggaagccttg gcttttgacc
1501  cccctccctg ggtcaagccc tttgtacacc ctaagcctcc gcctcctctt cctccatccg
1561  ccccgtctct ccccccttgaa cctcctcgtt cgaccccgcc tcgatcctcc ctttatccag
1621  ccctcactcc ttctctaggc gccggaattc cgatctgatc aagagacagg atgaggatcg
1681  tttcgcatga ttgaacaaga tggattgcac gcaggttctc cggccgcttg ggtggagagg
1741  ctattcggct atgactgggc acaacagaca atcggctgct ctgatgccgc cgtgttccgg
1801  ctgtcagcgc aggggcgccc ggttcttttt gtcaagaccg acctgtccgg tgccctgaat
1861  gaactgcagg acgaggcagc gcggctatcg tggctggcca cgacgggcgt tccttgcgca
1921  gctgtgctcg acgttgtcac tgaagcggga agggactggc tgctattggg cgaagtgccg
1981  gggcaggatc tcctgtcatc tcaccttgct cctgccgaga aagtatccat catggctgat
2041  gcaatgcggc ggctgcatac gcttgatccg gctacctgcc cattcgacca ccaagcgaaa
2101  catcgcatcg agcgagcacg tactcggatg gaagccggtc ttgtcgatca ggatgatctg
2161  gacgaagagc atcaggggct cgcgccagcc gaactgttcg ccaggctcaa ggcgcgcatg
2221  cccgacggcg aggatctcgt cgtgacccat ggcgatgcct gcttgccgaa tatcatggtg
2281  gaaaatggcc gcttttctgg attcatcgac tgtggccggc tgggtgtggc ggaccgctat
2341  caggacatag cgttggctac ccgtgatatt gctgaagagc ttggcggcga atgggctgac
2401  cgcttcctcg tgctttacgg tatcgccgct cccgattcgc agcgcatcgc cttctatcgc
2461  cttcttgacg agttcttctg agcgggactc tggggttcga aatgaccgac caagcgacgc
2521  ccaacctgcc atcacgagat ttcgattcca ccgccgcctt ctatgaaagg ttgggcttcg
2581  gaatcgtttt ccgggacgcc ggctggatga tcctccagcg cggggatctc atgctggagt
2641  tcttcgccca ccccgggctc gatcccctcg cgagttggtt cagctgctgc ctgaggctgg
2701  acgacctcgc ggagttctac cggcagtgca aatccgtcgg catccaggaa accagcagcg
2761  gctatccgcg catccatgcc cccgaactgc aggagtgggg aggcacgatg gccgctttgg
2821  tcgaggcgga tccggccatt agccatatta ttcattggtt atatagcata aatcaatatt
2881  ggctattggc cattgcatac gttgtatcca tatcataata tgtacattta tattggctca
2941  tgtccaacat taccgccatg ttgacattga ttattgacta gttattaata gtaatcaatt
3001  acggggtcat tagttcatag cccatatatg gagttccgcg ttacataact tacggtaaat
3061  ggcccgcctg gctgaccgcc caacgacccc cgcccattga cgtcaataat gacgtatgtt
```

3121 cccatagtaa cgccaatagg gactttccat tgacgtcaat gggtggagta tttacggtaa
3181 actgcccact tggcagtaca tcaagtgtat catatgccaa gtacgccccc tattgacgtc
3241 aatgacggta aatggcccgc ctggcattat gcccagtaca tgaccttatg ggactttcct
3301 acttggcagt acatctacgt attagtcatc gctattacca tggtgatgcg gttttggcag
3361 tacatcaatg ggcgtggata gcggtttgac tcacggggat ttccaagtct ccaccccatt
3421 gacgtcaatg ggagtttgtt ttggcaccaa aatcaacggg actttccaaa atgtcgtaac
3481 aactccgccc cattgacgca aatgggcggt aggcatgtac ggtgggaggt ctatataagc
3541 agagctcgtt tagtgaaccg tcagatcgcc tggagacgcc atccacgctg ttttgacctc
3601 catagaagac accgggaccg atccagcctc cgcggcccca agcttgttaa catcgataaa
3661 ataaaagatt ttatttagtc tccagaaaaa ggggggaatg aaagacccca cctgtaggtt
3721 tggcaaagct agagaaccat cagatgtttc cagggtgccc caaggacctg aaatgaccct
3781 gtgccttatt tgaactaacc aatcagttcg cttctcgctt ctgttcgcgc gcttctgctc
3841 cccgagctca ataaaagagc ccacaacccc tcactcgggg cgccagtcct ccgattgact
3901 gagtcgcccg ggtacccgtg tatccaataa accctcttgc agttgcatcc gacttgtggt
3961 ctcgctgttc cttgggaggg tctcctctga gtgattgact acccgtcagc gggggtcttt
4021 catttggggg ctcgtccggg atcgggagac ccctgcccag ggaccaccga cccaccaccg
4081 ggaggtaagc tggctgcctc gcgcgtttcg gtgatgacgg tgaaaacctc tgacacatgc
4141 agctcccgga gacggtcaca gcttgtctgt aagcggatgc cgggagcaga caagcccgtc
4201 agggcgcgtc agcgggtgtt ggcgggtgtc ggggcgcagc catgacccag tcacgtagcg
4261 atagcggagt gtatctagct aggtagctag aggatctttg tgaaggaacc ttacttctgt
4321 ggtgtgacat aattggacaa actacctaca gagatttaaa gctctaaggt aaatataaaa
4381 tttttaagtg tataatgtgt taaactactg attctaattg tttgtgtatt ttagattcca
4441 acctatggaa ctgatgaatg ggagcagtgg tggaatgcct ttaatgagga aaacctgttt
4501 tgctcagaag aaatgccatc tagtgatgat gaggctactg ctgactctca acattctact
4561 cctccaaaaa agaagagaaa ggtagaagac cccaaggact ttccttcaga attgctaagt
4621 tttttgagtc atgctgtgtt tagtaataga actcttgctt gctttgctat ttacaccaca
4681 aaggaaaaag ctgcactgct atacaagaaa attatggaaa aatatttgat gtatagtgcc
4741 ttgactagag atcataatca gccataccac atttgtagag gttttacttg ctttaaaaaa
4801 cctcccacac ctccccctga acctgaaaca taaaatgaat gcaattgttg ttgttaactt
4861 gtttattgca gcttataatg gttacaaata aagcaatagc atcacaaatt tcacaaataa
4921 agcatttttt tcactgcatt ctagttgtgg tttgtccaaa ctcatcaatg tatcttatca
4981 tgtctgatca gcttcagaag atggcggagg gcctccaaca cagtaatttt cctcccgact
5041 cttaaaatag aaaatgtcaa gtcagttaag caggaagtgg actaactgac gcagctggcc
5101 gtgcgacatc ctcttttaat tagttgctag gcaacgccct ccagagggcg tgtggttttg
5161 caagaggaag caaaagcctc tccacccagg cctagaatgt ttccacccaa tcattactat
5221 gacaacagct gtttttttta gtattaagca gaggccgggg acccctggcc cgcttactct
5281 ggagaaaaaa aacattgtag aggcttccag aggcaacttg tcaaaacagg actgcttcta
5341 tttctgtcac actgtctggc cctgtcacaa ggtccagcac ctccataccc cctttaataa
5401 gcagtttggg aacgggtgcg ggtcttactc cgcccatccg cccctaactc cgcccagttc
5461 cgcccattct ccgccccatg ctgactaatt ttttttattt atgcagaggc cgaggccgcc
5521 tcggcctctg agctattcca gaagtagtga ggaggctttt ttggaggctg cattaatgaa
5581 tcggccaacg cgcggggaga ggcggtttgc gtattgggcg ctcttccgct tcctcgctca
5641 ctgactcgct gcgctcggtc gttcggctgc ggcgagcggt atcagctcac tcaaaggcgg
5701 taatacggtt atccacagaa tcaggggata acgcaggaaa gaacatgtga gcaaaaggcc
5761 agcaaaaggc caggaaccgt aaaaaggccg cgttgctggc gtttttccat aggctccgcc
5821 cccctgacga gcatcacaaa aatcgacgct caagtcagag gtggcgaaac ccgacaggac
5881 tataaagata ccaggcgttt ccccctggaa gctccctcgt gcgctctcct gttccgaccc
5941 tgccgcttac cggatacctg tccgcctttc tcccttcggg aagcgtggcg ctttctcata
6001 gctcacgctg taggtatctc agttcggtgt aggtcgttcg ctccaagctg ggctgtgtgc
6061 acgaaccccc cgttcagccc gaccgctgcg ccttatccgg taactatcgt cttgagtcca
6121 acccggtaag acacgactta tcgccactgg cagcagccac tggtaacagg attagcagag
6181 cgaggtatgt aggcggtgct acagagttct tgaagtggtg gcctaactac ggctacacta
6241 gaaggacagt atttggtatc tgcgctctgc tgaagccagt taccttcgga aaaagagttg
6301 gtagctcttg atccggcaaa caaaccaccg ctggtagcgg tggtttttt gtttgcaagc
6361 agcagattac gcgcagaaaa aaaggatctc aagaagatcc tttgatcttt tctacggggt
6421 ctgacgctca gtggaacgaa aactcacgtt aagggatttt ggtcatgaga ttatcaaaaa
6481 ggatcttcac ctagatcctt ttaaattaaa aatgaagttt taaatcaatc taaagtatat

```
6541  atgagtaaac ttggtctgac agttaccaat gcttaatcag tgaggcacct atctcagcga
6601  tctgtctatt tcgttcatcc atagttgcct gactccccgt cgtgtagata actacgatac
6661  gggagggctt accatctggc cccagtgctg caatgatacc gcgagaccca cgctcaccgg
6721  ctccagattt atcagcaata aaccagccag ccggaagggc cgagcgcaga agtggtcctg
6781  caactttatc cgcctccatc cagtctatta attgttgccg ggaagctaga gtaagtagtt
6841  cgccagttaa tagtttgcgc aacgttgttg ccattgctgc aggcatcgtg gtgtcacgct
6901  cgtcgtttgg tatggcttca ttcagctccg gttcccaacg atcaaggcga gttacatgat
6961  cccccatgtt gtgcaaaaaa gcggttagct ccttcggtcc tccgatcgtt gtcagaagta
7021  agttggccgc agtgttatca ctcatggtta tggcagcact gcataattct cttactgtca
7081  tgccatccgt aagatgcttt tctgtgactg gtgagtactc aaccaagtca ttctgagaat
7141  agtgtatgcg gcgaccgagt tgctcttgcc cggcgtcaat acgggataat accgcgccac
7201  atagcagaac tttaaaagtg ctcatcattg gaaaacgttc ttcggggcga aaactctcaa
7261  ggatcttacc gctgttgaga tccagttcga tgtaacccac tcgtgcaccc aactgatctt
7321  cagcatcttt tactttcacc agcgtttctg ggtgagcaaa aacaggaagg caaaatgccg
7381  caaaaaaggg aataagggcg acacggaaat gttgaatact catactcttc ctttttcaat
7441  attattgaag catttatcag ggttattgtc tcatgagcgg atacatattt gaatgtattt
7501  agaaaaataa acaaataggg gttccgcgca catttccccg aaaagtgcca cctgacgtct
7561  aagaaaccat tattatcatg acattaacct ataaaaatag gcgtatcacg aggccctttc
7621  gtctcgcgcg tttcggtgat gacggtgaaa acctctgaca catgcagctc ccggagacgg
7681  tcacagcttg tctgtaagcg gatgccggga gcagacaagc ccgtcagggc gcgtcagcgg
7741  gtgttggcgg gtgtcggggc tggcttaact atgcggcatc agagcagatt gtactgagag
7801  tgcaccatat gcggtgtgaa ataccgcaca gatgcgtaag gagaaaatac cgcatcaggc
7861  gccattcgcc attcaggctg cgcaactgtt gggaagggcg atcggtgcgg gcctcttcgc
7921  tattacgcc
```

Nucleotide Sequence pCLNRX

CGCGTTGACATTGATTATTGACTAGTTATTAATAGTAATCAATTACGGGGTCATTAGTTC
ATAGCCCATATATGGAGTTCCGCGTTACATAACTTACGGTAAATGGCCCGCCTGGCTGAC
CGCCCAACGACCCCCGCCCATTGACGTCAATAATGACGTATGTTCCATAGTAACGCCAAT
AGGGACTTTCCATTGACGTCAATGGGTGGACTATTTACGGTAAACTGCCCACTTGGCAGT
ACATCAAGTGTATCATATGCCAAGTACGCCCCCTATTGACGTCAATGACGGTAAATGGCC
CGCCTGGCATTATGCCCAGTACATGACCTTATGGGACTTTCCTACTTGGCAGTACATCTA
CGTATTAGTCATCGCTATTACCATGTGATGCGGTTTTGGCAGTACATCAATGGGCGTGGA
TAGCGGTTTGACTCACGGGGATTTCCAAGTCTCCACCCCATTGACGTCAATGGGAGTTTG
TTTTGGCACCAAAATCAACGGGACTTTCCAAAATGTCGTAACAACTCCGCCCCATTGACG
CAAATGGGCGGTAGGCGTGTACGGTGGGAGGTCTATATAAGCAGAGCTCAATAAAAGAGC
CCACAACCCCTCACTCGGCGCGCCAGTCTTCCGATAGACTGCGTCGCCCGGGTACCCGTA
TTCCCAATAAAGCCTCTTGCTGTTTGCATCCGAATCGTGGTCTCGCTGTTCCTTGGGAGG
GTCTCCTCTGAGTGATTGACTACCCACGACGGGGGTCTTTCATTTGGGGGCTCGTCCGGG
ATTTGGAGACCCCTGCCCAGGGACCACCGACCCACCACCGGGAGGTAAGCTGGCCAGCAA
CTTATCTGTGTCTGTCCGATTGTCTAGTGTCTATGTTTGATGTTATGCGCCTGCGTCTGT
ACTAGTTAGCTAACTAGCTCTGTATCTGGCGGACCCGTGGTGGAACTGACGAGTTCTGAA
CACCCGGCCGCAACCCTGGGAGACGTCCCAGGGACTTTGGGGGCCGTTTTTGTGGCCCGA
CCTGAGGAAGGGAGTCGATGTGGAATCCGACCCCGTCAGGATATGTGGTTCTGGTAGGAG
ACGAGAACCTAAAACAGTTCCCGCCTCCGTCTGAATTTTTGCTTTCGGTTTGGAACCGAA
GCCGCGCGTCTTGTCTGCTGCAGCGCTGCAGCATCGTTCTGTGTTGTCTCTGTCTGACTG
TGTTTCTGTATTTGTCTGAAAATTAGGGCCAGACTGTTACCACTCCCTTAAGTTTGACCT
TAGGTCACTGGAAAGATGTCGAGCGGATCGCTCACAACCAGTCGGTAGATGTCAAGAAGA
GACGTTGGGTTACCTTCTGCTCTGCAGAATGGCCAACCTTTAACGTCGGATGGCCGCGAG
ACGGCACCTTTAACCGAGACCTCATCACCCAGGTTAAGATCAAGGTCTTTTCACCTGGCC
CGCATGGACACCCAGACCAGGTCCCCTACATCGTGACCTGGGAAGCCTTGGCTTTTGACC
CCCCTCCCTGGGTCAAGCCCTTTGTACACCCTAAGCCTCCGCCTCCTCTTCCTCCATCCG
CCCCGTCTCTCCCCCTTGAACCTCCTCGTTCGACCCCGCCTCGATCCTCCCTTTATCCAG
CCCTCACTCCTTCTCTAGGCGCCGGAATTCCGATCTGATCAAGAGACAGGATGAGGATCG
TTTCGCATGATTGAACAAGATGGATTGCACGCAGGTTCTCCGGCCGCTTGGGTGGAGAGG
CTATTCGGCTATGACTGGGCACAACAGACAATCGGCTGCTCTGATGCCGCCGTGTTCCGG
CTGTCAGCGCAGGGGCGCCCGGTTCTTTTTGTCAAGACCGACCTGTCCGGTGCCCTGAAT
GAACTGCAGGACGAGGCAGCGCGGCTATCGTGGCTGGCCACGACGGGCGTTCCTTGCGCA
GCTGTGCTCGACGTTGTCACTGAAGCGGGAAGGGACTGGCTGCTATTGGGCGAAGTGCCG
GGGCAGGATCTCCTGTCATCTCACCTTGCTCCTGCCGAGAAAGTATCCATCATGGCTGAT
GCAATGCGGCGGCTGCATACGCTTGATCCGGCTACCTGCCCATTCGACCACCAAGCGAAA
CATCGCATCGAGCGAGCACGTACTCGGATGGAAGCCGGTCTTGTCGATCAGGATGATCTG
GACGAAGAGCATCAGGGGCTCGCGCCAGCCGAACTGTTCGCCAGGCTCAAGGCGCGCATG
CCCGACGGCGAGGATCTCGTCGTGACCCATGGCGATGCCTGCTTGCCGAATATCATGGTG
GAAAATGGCCGCTTTTCTGGATTCATCGACTGTGGCCGGCTGGGTGTGGCGGACCGCTAT
CAGGACATAGCGTTGGCTACCCGTGATATTGCTGAAGAGCTTGGCGGCGAATGGGCTGAC
CGCTTCCTCGTGCTTTACGGTATCGCCGCTCCCGATTCGCAGCGCATCGCCTTCTATCGC
CTTCTTGACGAGTTCTTCTGAGCGGGACTCTGGGGTTCGAAATGACCGACCAAGCGACGC
CCAACCTGCCATCACGAGATTTCGATTCCACCGCCGCCTTCTATGAAAGGTTGGGCTTCG
GAATCGTTTTCCGGGACGCCGGCTGGATGATCCTCCAGCGCGGGGATCTCATGCTGGAGT
TCTTCGCCCACCCCGGGCTCGATCCCCTCGCGAGTTGGTTCAGCTGCTGCCTGAGGCTGG
ACGACCTCGCGGAGTTCTACCGGCAGTGCAAATCCGTCGGCATCCAGGAAACCAGCAGCG
GCTATCCGCGCATCCATGCCCCCGAACTGCAGGAGTGGGGAGGCACGATGGCCGCTTTGG
TCGAGGCTCCCCTCAGGATATAGTAGTTTCGCTTTTGCATAGGGAGGGGGAAATGTAGTC
TTATGCAATACACTTGTAGTCTTGCAACATGGTAACGATGAGTTAGCAACATGCCTTACA
AGGAGAGAAAAAGCACCGTGCATGCCGATTGGTGGAAGTAAGGTGGTACGATCGTGCCTT
ATTAGGAAGGCAACAGACAGGTCTGACATGGATTGGACGAACCACTGAATTCCGCATTGC
AGAGATAATTGTATTTAAGTGCCTAGCTCGATACAATAAACGCCATTTGACCATTCACCA

CATTGGTGTGCACCTCCAAAGCTTGTTAACATCGATAAAATAAAAGATTTTATTTAGTCT
CCAGAAAAAGGGGGGAATGAAAGACCCCACCTGTAGGTTTGGCAAGCTAGCTTAAGTAAC
GCCATTTTGCAAGGCATGGAAAAATACATAACTGAGAATAGAGAAGTTCAGATCAAGGTC
AGGAACAGATGGAACAGCTGAATATGGGCCAAACAGGATATCTGTGGTAAGCAGTTCCTG
CCCCGGCTCAGGGCCAAGAACAGATGGAACAGCTGAATATGGGCCAAACAGGATATCTGT
GGTAAGCAGTTCCTGCCCCGGCTCAGGGCCAAGAACAGATGGTCCCCAGATGCGGTCCAG
CCCTCAGCAGTTTCTAGAGAACCATCAGATGTTTCCAGGGTGCCCCAAGGACCTGAAATG
ACCCTGTGCCTTATTTGAACTAACCAATCAGTTCGCTTCTCGCTTCTGTTCGCGCGCTTC
TGCTCCCCGAGCTCAATAAAAGAGCCCACAACCCCTCACTCGGGGCGCCAGTCCTCCGAT
TGACTGAGTCGCCCGGGTACCCGTGTATCCAATAAACCCTCTTGCAGTTGCATCCGACTT
GTGGTCTCGCTGTTCCTTGGGAGGGTCTCCTCTGAGTGATTGACTACCCGTCAGCGGGGG
TCTTTCATTTGGGGGCTCGTCCGGGATCGGGAGACCCCTGCCCAGGGACCACCGACCCAC
CACCGGGAGGTAAGCTGGCTGCCTCGCGCGTTTCGGTGATGACGGTGAAAACCTCTGACA
CATGCAGCTCCCGGAGACGGTCACAGCTTGTCTGTAAGCGGATGCCGGGAGCAGACAAGC
CCGTCAGGGCGCGTCAGCGGGTGTTGGCGGGTGTCGGGGCGCAGCCATGACCCAGTCACG
TAGCGATAGCGGAGTGTATACCTAGCTAGGTAGCTAGAGGATCTTTGTGAAGGAACCTTA
CTTCTGTGGTGTGACATAATTGGACAAACTACCTACAGAGATTTAAAGCTCTAAGGTAAA
TATAAAATTTTTAAGTGTATAATGTGTTAAACTACTGATTCTAATTGTTTGTGTATTTTA
GATTCCAACCTATGGAACTGATGAATGGGAGCAGTGGTCCAATGCCTTTAATGAGGAAAA
CCTGTTTTGCTCAGAAGAAATGCCTCTAGTGATGATGAGGCTACTGCTGACTCTCAACAT
TCTACTCCTCCAAAAAAGAAGAGAAAGGTAGAAGACCCCAAGGACTTTCCTTCAGAATTG
CTAAGTTTTTTGAGTCATGCTGTGTTTAGTAATAGAACTCTTGCTTGCTTTGCTATTTAC
ACCACAAAGGAAAAAGCTGCACTGCTATACAAGAAAATTATGGAAAAATATTTGATGTAT
AGTGCCTTGACTAGAGATCATAATCAGCCATACCACATTTGTAGAGGTTTTACTTGCTTT
AAAAAACCTCCCACACCTCCCCCTGAACCTGAAACATAAAATGAATGCAATTGTTGTTGT
TAACTTGTTTATTGCAGCTTATAATGGTTACAAATAAAGCAATAGCATCACAAATTTCAC
AAATAAAGCATTTTTTTCACTGCATTCTAGTTGTGGTTTGTCCAAACTCATCAATGTATC
TTATCATGTCTGTGATCAGCTTCAGAAGATGGCGGAGGGCCTCCAACACAGTAATTTTCC
TCCCGACTCTTAAAATAGAAAATGTCAAGTCAGTTAAGCAGGAAGTGGACTAACTGACGC
AGCTGGCCGTGCGACATCCTCTTTTAATTAGTTGCTAGGCAACGCCCTCCAGAGGGCGTG
TGGTTTTGCAAGAGGAAGCAAAAGCCTCTCCACCCAGGCCTAGAATGTTTCCACCCAATC
ATTACTATGACAACAGCTGTTTTTTTTAGTATTAAGCAGAGGCCGGGGACCCCTGGCCCG
CTTACTCTGGAGAAAAAAAAACATTGTAGAGGCTTCCAGAGGCAACTTGTCAAAACAGGAC
TGCTTCTATTTCTGTCACACTGTCTGGCCCTGTCACAAGGTCCAGCACCTCCATACCCCC
TTTAATAAGCAGTTTGGGAACGGGTGCGGGTCTTACTCCGCCCATCCGCCCCTAACTCCG
CCCAGTTCCGCCCATTCTCCGCCCCATGCTGACTAATTTTTTTTATTTATGCAGAGGCCG
AGGCCGCCTCGGCCTCTGAGCTATTCCAGAAGTAGTGAGGAGGCTTTTTTGGAGGCTGCA
TTAATGAATCGGCCAACGCGCGGGGAGAGGCGGTTTGCGTATTGGGCGCTCTTCCGCTTC
CTCGCTCACTGACTCGCTGCGCTCGGTCGTTCGGCTGCGGCGAGCGGTATCAGCTCACTC
AAAGGCGGTAATACGGTTATCCACAGAATCAGGGGATAACGCAGGAAAGAACATGTGAGC
AAAAGGCCAGCAAAAGGCCAGGAACCGTAAAAAGGCCGCGTTGCTGGCGTTTTTCCATAG
GCTCCGCCCCCCTGACGAGCATCACAAAAATCGACGCTCAAGTCAGAGGTGGCGAAACCC
GACAGGACTATAAAGATACCAGGCGTTTCCCCCTGGAAGCTCCCTCGTGCGCTCTCCTGT
TCCGACCCTGCCGCTTACCGGATACCTGTCCGCCTTTCTCCCTTCGGGAAGCGTGGCGCT
TTCTCATAGCTCACGCTGTAGGTATCTCAGTTCGGTGTAGGTCGTTCGCTCCAAGCTGGG
CTGTGTGCACGAACCCCCCGTTCAGCCCGACCGCTGCGCCTTATCCGGTAACTATCGTCT
TGAGTCCAACCCGGTAAGACACGACTTATCGCCACTGGCAGCAGCCACTGGTAACAGGAT
TAGCAGAGCGAGGTATGTAGGCGGTGCTACAGAGTTCTTGAAGTGGTGGCCTAACTACGG
CTACACTAGAAGGACAGTATTTGGTATCTGCGCTCTGCTGAAGCCAGTTACCTTCGGAAA
AAGAGTTGGTAGCTCTTGATCCGGCAAACAAACCACCGCTGGTAGCGGTGGTTTTTTTGT
TTGCAAGCAGCAGATTACGCGCAGAAAAAAAGGATCTCAAGAAGATCCTTTGATCTTTTC
TACGGGGTCTGACGCTCAGTGGAACGAAAACTCACGTTAAGGGATTTTGGTCATGAGATT
ATCAAAAAGGATCTTCACCTAGATCCTTTTAAATTAAAAATGAAGTTTTAAATCAATCTA
AAGTATATATGAGTAAACTTGGTCTGACAGTTACCAATGCTTAATCAGTGAGGCACCTAT
CTCAGCGATCTGTCTATTTCGTTCATCCATAGTTGCCTGACTCCCCGTCGTGTAGATAAC
TACGATACGGGAGGGCTTACCATCTGGCCCCAGTGCTGCAATGATACCGCGAGACCCACG

CTCACCGGCTCCAGATTTATCAGCAATAAACCAGCCAGCCGGAAGGGCCGAGCGCAGAAG
TGGTCCTGCAACTTTATCCGCCTCCATCCAGTCTATTAATTGTTGCCGGGAAGCTAGAGT
AAGTAGTTCGCCAGTTAATAGTTTGCGCAACGTTGTTGCCATTGCTGCAGGCATCGTGGT
GTCACGCTCGTCGTTTGGTATGGCTTCATTCAGCTCCGGTTCCCAACGATCAAGGCGAGT
TACATGATCCCCCATGTTGTGCAAAAAAGCGGTTAGCTCCTTCGGTCCTCCGATCGTTGT
CAGAAGTAAGTTGGCCGCAGTGTTATCACTCATGGTTATGGCAGCACTGCATAATTCTCT
TACTGTCATGCCATCCGTAAGATGCTTTTCTGTGACTGGTGAACTCAACCAAGTCATTCT
GAGAATAGTGTATGCGGCGACCGAGTTGCTCTTGCCCGGCGTCAATACGGGATAATACCG
CGCCACATAGCAGAACTTTAAAAGTGCTCATCATTGGAAAACGTTCTTCGGGGCGAAAAC
TCTCAAGGATCTTACCGCTGTTGAGATCCAGTTCGATGTAACCCACTCGTGCACCCAACT
GATCTTCAGCATCTTTTACTTTCACCAGCGTTTCTGGGTGAGCAAAAACAGGAAGGCAAA
ATGCCGCAAAAAAGGGAATAAGGGCGACACGGAAATGTTGAATACTCATACTCTTCCTTT
TTCAATATTATTGAAGCATTTATCAGGGTTATTGTCTCATGAGCGGATACATATTTGAAT
GTATTTAGAAAAATAAACAAATAGGGGTTCCGCGCACATTTCCCCGAAAAGTGCCACCTG
ACGTCTAAGAAACCATTATTATCATGACATTAACCTATAAAAATAGGCGTATCACGAGGC
CCTTTCGTCTCGCGCGTTTCGGTGATGACGGTGAAAACCTCTGACACATGCAGCTCCCGG
AGACGGTCACAGCTTGTCTGTAAGCGGATGCCGGGAGCAGACAAGCCCGTCAGGGCGCGT
CAGCGGGTGTTGGCGGGTGTCGGGGCTGGCTTAACTATGCGGCATCAGAGCAGATTGTAC
TGAGAGTGCACCATATGCGGTGTGAAATACCGCACAGATGCGTAAGGAGAAAATACCGCA
TCAGGCGCCATTCGCCATTCAGGCTGCGCAACTGTTGGGAAGGGCGATCGGTGCGGGCCT
CTTCGCTATTACGCC

CGCGTTGACATTGATTATTGACTAGTTATTAATAGTAATCAATTACGGGGTCATTAGTTC
ATAGCCCATATATGGAGTTCCGCGTTACATAACTTACGGTAAATGGCCCGCCTGGCTGAC
CGCCCAACGACCCCCGCCCATTGACGTCAATAATGACGTATGTTCCATAGTAACGCCAAT
AGGGACTTTCCATTGACGTCAATGGGTGGACTATTTACGGTAAACTGCCCACTTGGCAGT
ACATCAAGTGTATCATATGCCAAGTACGCCCCCTATTGACGTCAATGACGGTAAATGGCC
CGCCTGGCATTATGCCCAGTACATGACCTTATGGGACTTTCCTACTTGGCAGTACATCTA
CGTATTAGTCATCGCTATTACCATGTGATGCGGTTTTGGCAGTACATCAATGGGCGTGGA
TAGCGGTTTGACTCACGGGGATTTCCAAGTCTCCACCCCATTGACGTCAATGGGAGTTTG
TTTTGGCACCAAAATCAACGGGACTTTCCAAAATGTCGTAACAACTCCGCCCCATTGACG
CAAATGGGCGGTAGGCGTGTACGGTGGGAGGTCTATATAAGCAGAGCTCAATAAAAGAGC
CCACAACCCCTCACTCGGCGCGCCAGTCTTCCGATAGACTGCGTCGCCCGGGTACCCGTA
TTCCCAATAAAGCCTCTTGCTGTTTGCATCCGAATCGTGGTCTCGCTGTTCCTTGGGAGG
GTCTCCTCTGAGTGATTGACTACCCACGACGGGGGTCTTTCATTTGGGGGCTCGTCCGGG
ATTTGGAGACCCCTGCCCAGGGACCACCGACCCACCACCGGGAGGTAAGCTGGCCAGCAA
CTTATCTGTGTCTGTCCGATTGTCTAGTGTCTATGTTTGATGTTATGCGCCTGCGTCTGT
ACTAGTTAGCTAACTAGCTCTGTATCTGGCGGACCCGTGGTGGAACTGACGAGTTCTGAA
CACCCGGCCGCAACCCTGGGAGACGTCCCAGGGACTTTGGGGGCCGTTTTTGTGGCCCGA
CCTGAGGAAGGGAGTCGATGTGGAATCCGACCCCGTCAGGATATGTGGTTCTGGTAGGAG
ACGAGAACCTAAAACAGTTCCCGCCTCCGTCTGAATTTTTGCTTTCGGTTTGGAACCGAA
GCCGCGCGTCTTGTCTGCTGCAGCGCTGCAGCATCGTTCTGTGTTGTCTCTGTCTGACTG
TGTTTCTGTATTTGTCTGAAAATTAGGGCCAGACTGTTACCACTCCCTTAAGTTTGACCT
TAGGTCACTGGAAAGATGTCGAGCGGATCGCTCACAACCAGTCGGTAGATGTCAAGAAGA
GACGTTGGGTTACCTTCTGCTCTGCAGAATGGCCAACCTTTAACGTCGGATGGCCGCGAG
ACGGCACCTTTAACCGAGACCTCATCACCCAGGTTAAGATCAAGGTCTTTTCACCTGGCC
CGCATGGACACCCAGACCAGGTCCCCTACATCGTGACCTGGGAAGCCTTGGCTTTTGACC
CCCCTCCCTGGGTCAAGCCCTTTGTACACCCTAAGCCTCCGCCTCCTCTTCCTCCATCCG
CCCCGTCTCTCCCCCTTGAACCTCCTCGTTCGACCCCGCCTCGATCCTCCCTTTATCCAG
CCCTCACTCCTTCTCTAGGCGCCGGAATTCCGATCTGATCAAGAGACAGGATGAGGATCG
TTTCGCATGATTGAACAAGATGGATTGCACGCAGGTTCTCCGGCCGCTTGGGTGGAGAGG
CTATTCGGCTATGACTGGGCACAACAGACAATCGGCTGCTCTGATGCCGCCGTGTTCCGG
CTGTCAGCGCAGGGGCGCCCGGTTCTTTTTGTCAAGACCGACCTGTCCGGTGCCCTGAAT
GAACTGCAGGACGAGGCAGCGCGGCTATCGTGGCTGGCCACGACGGGCGTTCCTTGCGCA
GCTGTGCTCGACGTTGTCACTGAAGCGGGAAGGGACTGGCTGCTATTGGGCGAAGTGCCG
GGGCAGGATCTCCTGTCATCTCACCTTGCTCCTGCCGAGAAAGTATCCATCATGGCTGAT

GCAATGCGGCGGCTGCATACGCTTGATCCGGCTACCTGCCCATTCGACCACCAAGCGAAA
CATCGCATCGAGCGAGCACGTACTCGGATGGAAGCCGGTCTTGTCGATCAGGATGATCTG
GACGAAGAGCATCAGGGGCTCGCGCCAGCCGAACTGTTCGCCAGGCTCAAGGCGCGCATG
CCCGACGGCGAGGATCTCGTCGTGACCCATGGCGATGCCTGCTTGCCGAATATCATGGTG
GAAAATGGCCGCTTTTCTGGATTCATCGACTGTGGCCGGCTGGGTGTGGCGGACCGCTAT
CAGGACATAGCGTTGGCTACCCGTGATATTGCTGAAGAGCTTGGCGGCGAATGGGCTGAC
CGCTTCCTCGTGCTTTACGGTATCGCCGCTCCCGATTCGCAGCGCATCGCCTTCTATCGC
CTTCTTGACGAGTTCTTCTGAGCGGGACTCTGGGGTTCGAAATGACCGACCAAGCGACGC
CCAACCTGCCATCACGAGATTTCGATTCCACCGCCGCCTTCTATGAAAGGTTGGGCTTCG
GAATCGTTTTCCGGGACGCCGGCTGGATGATCCTCCAGCGCGGGGATCTCATGCTGGAGT
TCTTCGCCCACCCCGGGCTCGATCCCCTCGCGAGTTGGTTCAGCTGCTGCCTGAGGCTGG
ACGACCTCGCGGAGTTCTACCGGCAGTGCAAATCCGTCGGCATCCAGGAAACCAGCAGCG
GCTATCCGCGCATCCATGCCCCCGAACTGCAGGAGTGGGGAGGCACGATGGCCGCTTTGG
TCGAGGCTCCCCTCAGGATATAGTAGTTTCGCTTTTGCATAGGGAGGGGGAAATGTAGTC
TTATGCAATACACTTGTAGTCTTGCAACATGGTAACGATGAGTTAGCAACATGCCTTACA
AGGAGAGAAAAAGCACCGTGCATGCCGATTGGTGGAAGTAAGGTGGTACGATCGTGCCTT
ATTAGGAAGGCAACAGACAGGTCTGACATGGATTGGACGAACCACTGAATTCCGCATTGC
AGAGATAATTGTATTTAAGTGCCTAGCTCGATACAATAAACGCCATTTGACCATTCACCA
CATTGGTGTGCACCTCCAAAGCTTGTTAACATCGATAAAATAAAAGATTTTATTTAGTCT
CCAGAAAAAGGGGGGAATGAAAGACCCCACCTGTAGGTTTGGCAAGCTAGCTTAAGTAAC
GCCATTTTGCAAGGCATGGAAAAATACATAACTGAGAATAGAGAAGTTCAGATCAAGGTC
AGGAACAGATGGAACAGCTGAATATGGGCCAAACAGGATATCTGTGGTAAGCAGTTCCTG
CCCCGGCTCAGGGCCAAGAACAGATGGAACAGCTGAATATGGGCCAAACAGGATATCTGT
GGTAAGCAGTTCCTGCCCCGGCTCAGGGCCAAGAACAGATGGTCCCCAGATGCGGTCCAG
CCCTCAGCAGTTTCTAGAGAACCATCAGATGTTTCCAGGGTGCCCCAAGGACCTGAAATG
ACCCTGTGCCTTATTTGAACTAACCAATCAGTTCGCTTCTCGCTTCTGTTCGCGCGCTTC
TGCTCCCCGAGCTCAATAAAAGAGCCCACAACCCCTCACTCGGGGCGCCAGTCCTCCGAT
TGACTGAGTCGCCCGGGTACCCGTGTATCCAATAAACCCTCTTGCAGTTGCATCCGACTT
GTGGTCTCGCTGTTCCTTGGGAGGGTCTCCTCTGAGTGATTGACTACCCGTCAGCGGGGG
TCTTTCATTTGGGGGCTCGTCCGGGATCGGGAGACCCCTGCCCAGGGACCACCGACCCAC
CACCGGGAGGTAAGCTGGCTGCCTCGCGCGTTTCGGTGATGACGGTGAAAACCTCTGACA
CATGCAGCTCCCGGAGACGGTCACAGCTTGTCTGTAAGCGGATGCCGGGAGCAGACAAGC
CCGTCAGGGCGCGTCAGCGGGTGTTGGCGGGTGTCGGGGCGCAGCCATGACCCAGTCACG
TAGCGATAGCGGAGTGTATACCTAGCTAGGTAGCTAGAGGATCTTTGTGAAGGAACCTTA
CTTCTGTGGTGTGACATAATTGGACAAACTACCTACAGAGATTTAAAGCTCTAAGGTAAA
TATAAAATTTTTAAGTGTATAATGTGTTAAACTACTGATTCTAATTGTTTGTGTATTTTA
GATTCCAACCTATGGAACTGATGAATGGGAGCAGTGGTCCAATGCCTTTAATGAGGAAAA
CCTGTTTTGCTCAGAAGAAATGCCTCTAGTGATGATGAGGCTACTGCTGACTCTCAACAT
TCTACTCCTCCAAAAAAGAAGAGAAAGGTAGAAGACCCCAAGGACTTTCCTTCAGAATTG
CTAAGTTTTTTGAGTCATGCTGTGTTTAGTAATAGAACTCTTGCTTGCTTTGCTATTTAC
ACCACAAAGGAAAAAGCTGCACTGCTATACAAGAAAATTATGGAAAAATATTTGATGTAT
AGTGCCTTGACTAGAGATCATAATCAGCCATACCACATTTGTAGAGGTTTTACTTGCTTT
AAAAAACCTCCCACACCTCCCCCTGAACCTGAAACATAAAATGAATGCAATTGTTGTTGT
TAACTTGTTTATTGCAGCTTATAATGGTTACAAATAAAGCAATAGCATCACAAATTTCAC
AAATAAAGCATTTTTTTCACTGCATTCTAGTTGTGGTTTGTCCAAACTCATCAATGTATC
TTATCATGTCTGTGATCAGCTTCAGAAGATGGCGGAGGGCCTCCAACACAGTAATTTTCC
TCCCGACTCTTAAAATAGAAAATGTCAAGTCAGTTAAGCAGGAAGTGGACTAACTGACGC
AGCTGGCCGTGCGACATCCTCTTTTAATTAGTTGCTAGGCAACGCCCTCCAGAGGGCGTG
TGGTTTTGCAAGAGGAAGCAAAAGCCTCTCCACCCAGGCCTAGAATGTTTCCACCCAATC
ATTACTATGACAACAGCTGTTTTTTTTAGTATTAAGCAGAGGCCGGGGACCCCTGGCCCG
CTTACTCTGGAGAAAAAAAACATTGTAGAGGCTTCCAGAGGCAACTTGTCAAAACAGGAC
TGCTTCTATTTCTGTCACACTGTCTGGCCCTGTCACAAGGTCCAGCACCTCCATACCCCC
TTTAATAAGCAGTTTGGGAACGGGTGCGGGTCTTACTCCGCCCATCCGCCCCTAACTCCG
CCCAGTTCCGCCCATTCTCCGCCCCATGCTGACTAATTTTTTTTATTTATGCAGAGGCCG
AGGCCGCCTCGGCCTCTGAGCTATTCCAGAAGTAGTGAGGAGGCTTTTTTGGAGGCTGCA
TTAATGAATCGGCCAACGCGCGGGGAGAGGCGGTTTGCGTATTGGGCGCTCTTCCGCTTC

CTCGCTCACTGACTCGCTGCGCTCGGTCGTTCGGCTGCGGCGAGCGGTATCAGCTCACTC
AAAGGCGGTAATACGGTTATCCACAGAATCAGGGGATAACGCAGGAAAGAACATGTGAGC
AAAAGGCCAGCAAAAGGCCAGGAACCGTAAAAAGGCCGCGTTGCTGGCGTTTTTCCATAG
GCTCCGCCCCCCTGACGAGCATCACAAAAATCGACGCTCAAGTCAGAGGTGGCGAAACCC
GACAGGACTATAAAGATACCAGGCGTTTCCCCCTGGAAGCTCCCTCGTGCGCTCTCCTGT
TCCGACCCTGCCGCTTACCGGATACCTGTCCGCCTTTCTCCCTTCGGGAAGCGTGGCGCT
TTCTCATAGCTCACGCTGTAGGTATCTCAGTTCGGTGTAGGTCGTTCGCTCCAAGCTGGG
CTGTGTGCACGAACCCCCCGTTCAGCCCGACCGCTGCGCCTTATCCGGTAACTATCGTCT
TGAGTCCAACCCGGTAAGACACGACTTATCGCCACTGGCAGCAGCCACTGGTAACAGGAT
TAGCAGAGCGAGGTATGTAGGCGGTGCTACAGAGTTCTTGAAGTGGTGGCCTAACTACGG
CTACACTAGAAGGACAGTATTTGGTATCTGCGCTCTGCTGAAGCCAGTTACCTTCGGAAA
AAGAGTTGGTAGCTCTTGATCCGGCAAACAAACCACCGCTGGTAGCGGTGGTTTTTTTGT
TTGCAAGCAGCAGATTACGCGCAGAAAAAAAGGATCTCAAGAAGATCCTTTGATCTTTTC
TACGGGGTCTGACGCTCAGTGGAACGAAAACTCACGTTAAGGGATTTTGGTCATGAGATT
ATCAAAAAGGATCTTCACCTAGATCCTTTTAAATTAAAAATGAAGTTTTAAATCAATCTA
AAGTATATATGAGTAAACTTGGTCTGACAGTTACCAATGCTTAATCAGTGAGGCACCTAT
CTCAGCGATCTGTCTATTTCGTTCATCCATAGTTGCCTGACTCCCCGTCGTGTAGATAAC
TACGATACGGGAGGGCTTACCATCTGGCCCCAGTGCTGCAATGATACCGCGAGACCCACG
CTCACCGGCTCCAGATTTATCAGCAATAAACCAGCCAGCCGGAAGGGCCGAGCGCAGAAG
TGGTCCTGCAACTTTATCCGCCTCCATCCAGTCTATTAATTGTTGCCGGGAAGCTAGAGT
AAGTAGTTCGCCAGTTAATAGTTTGCGCAACGTTGTTGCCATTGCTGCAGGCATCGTGGT
GTCACGCTCGTCGTTTGGTATGGCTTCATTCAGCTCCGGTTCCCAACGATCAAGGCGAGT
TACATGATCCCCCATGTTGTGCAAAAAAGCGGTTAGCTCCTTCGGTCCTCCGATCGTTGT
CAGAAGTAAGTTGGCCGCAGTGTTATCACTCATGGTTATGGCAGCACTGCATAATTCTCT
TACTGTCATGCCATCCGTAAGATGCTTTTCTGTGACTGGTGAACTCAACCAAGTCATTCT
GAGAATAGTGTATGCGGCGACCGAGTTGCTCTTGCCCGGCGTCAATACGGGATAATACCG
CGCCACATAGCAGAACTTTAAAAGTGCTCATCATTGGAAAACGTTCTTCGGGGCGAAAAC
TCTCAAGGATCTTACCGCTGTTGAGATCCAGTTCGATGTAACCCACTCGTGCACCCAACT
GATCTTCAGCATCTTTTACTTTCACCAGCGTTTCTGGGTGAGCAAAAACAGGAAGGCAAA
ATGCCGCAAAAAAGGGAATAAGGGCGACACGGAAATGTTGAATACTCATACTCTTCCTTT
TTCAATATTATTGAAGCATTTATCAGGGTTATTGTCTCATGAGCGGATACATATTTGAAT
GTATTTAGAAAAATAAACAAATAGGGGTTCCGCGCACATTTCCCCGAAAAGTGCCACCTG
ACGTCTAAGAAACCATTATTATCATGACATTAACCTATAAAAATAGGCGTATCACGAGGC
CCTTTCGTCTCGCGCGTTTCGGTGATGACGGTGAAAACCTCTGACACATGCAGCTCCCGG
AGACGGTCACAGCTTGTCTGTAAGCGGATGCCGGGAGCAGACAAGCCCGTCAGGGCGCGT
CAGCGGGTGTTGGCGGGTGTCGGGGCTGGCTTAACTATGCGGCATCAGAGCAGATTGTAC
TGAGAGTGCACCATATGCGGTGTGAAATACCGCACAGATGCGTAAGGAGAAAATACCGCA
TCAGGCGCCATTCGCCATTCAGGCTGCGCAACTGTTGGGAAGGGCGATCGGTGCGGGCCT
CTTCGCTATTACGCC

CMV - 21-584
RU5 – 584 -700
NeoR – 1645 – 2645
RSV- 2827 – 3039
3’LTR- 3502 – 3743
AMP- 7495-5026C

Nucleotide Sequence pCLNDX

CGCGTTGACATTGATTATTGACTAGTTATTAATAGTAATCAATTACGGGGTCATTAGTTCATAG
CCCATATATGGAGTTCCGCGTTACATAACTTACGGTAAATGGCCCGCCTGGCTGACCGCCCAA
CGACCCCCGCCCATTGACGTCAATAATGACGTATGTTCCATAGTAACGCCAATAGGGACTTTC
CATTGACGTCAATGGGTGGACTATTTACGGTAAACTGCCCACTTGGCAGTACATCAAGTGTAT
CATATGCCAAGTACGCCCCCTATTGACGTCAATGACGGTAAATGGCCCGCCTGGCATTATGCC
CAGTACATGACCTTATGGGACTTTCCTACTTGGCAGTACATCTACGTATTAGTCATCGCTATTA
CCATGTGATGCGGTTTTGGCAGTACATCAATGGGCGTGGATAGCGGTTTGACTCACGGGGATT
TCCAAGTCTCCACCCCATTGACGTCAATGGGAGTTTGTTTTGGCACCAAAATCAACGGGACTT
TCCAAAATGTCGTAACAACTCCGCCCCATTGACGCAAATGGGCGGTAGGCGTGTACGGTGGG
AGGTCTATATAAGCAGAGCTCAATAAAAGAGCCCACAACCCCTCACTCGGCGCGCCAGTCTTC
CGATAGACTGCGTCGCCCGGGTACCCGTATTCCCAATAAAGCCTCTTGCTGTTTGCATCCGAA
TCGTGGTCTCGCTGTTCCTTGGGAGGGTCTCCTCTGAGTGATTGACTACCCACGACGGGGGTCT
TTCATTTGGGGGCTCGTCCGGGATTTGGAGACCCCTGCCCAGGGACCACCGACCCACCACCGG
GAGGTAAGCTGGCCAGCAACTTATCTGTGTCTGTCCGATTGTCTAGTGTCTATGTTTGATGTTA
TGCGCCTGCGTCTGTACTAGTTAGCTAACTAGCTCTGTATCTGGCGGACCCGTGGTGGAACTG
ACGAGTTCTGAACACCCGGCCGCAACCCTGGGAGACGTCCCAGGGACTTTGGGGGCCGTTTTT
GTGGCCCGACCTGAGGAAGGGAGTCGATGTGGAATCCGACCCCGTCAGGATATGTGGTTCTG
GTAGGAGACGAGAACCTAAAACAGTTCCCGCCTCCGTCTGAATTTTTGCTTTCGGTTTGGAAC
CGAAGCCGCGCGTCTTGTCTGCTGCAGCGCTGCAGCATCGTTCTGTGTTGTCTCTGTCTGACTG
TGTTTCTGTATTTGTCTGAAAATTAGGGCCAGACTGTTACCACTCCCTTAAGTTTGACCTTAGG
TCACTGGAAAGATGTCGAGCGGATCGCTCACAACCAGTCGGTAGATGTCAAGAAGAGACGTT
GGGTTACCTTCTGCTCTGCAGAATGGCCAACCTTTAACGTCGGATGGCCGCGAGACGGCACCT
TTAACCGAGACCTCATCACCCAGGTTAAGATCAAGGTCTTTTCACCTGGCCCGCATGGACACC
CAGACCAGGTCCCCTACATCGTGACCTGGGAAGCCTTGGCTTTTGACCCCCCTCCCTGGGTCA
AGCCCTTTGTACACCCTAAGCCTCCGCCTCCTCTTCCTCCATCCGCCCCGTCTCTCCCCCTTGA
ACCTCCTCGTTCGACCCCGCCTCGATCCTCCCTTTATCCAGCCCTCACTCCTTCTCTAGGCGCC
GGAATTCCGATCTGATCAAGAGACAGGATGAGGATCGTTTCGCATGATTGAACAAGATGGAT
TGCACGCAGGTTCTCCGGCCGCTTGGGTGGAGAGGCTATTCGGCTATGACTGGGCACAACAGA
CAATCGGCTGCTCTGATGCCGCCGTGTTCCGGCTGTCAGCGCAGGGGCGCCCGGTTCTTTTTGT
CAAGACCGACCTGTCCGGTGCCCTGAATGAACTGCAGGACGAGGCAGCGCGGCTATCGTGGC
TGGCCACGACGGGCGTTCCTTGCGCAGCTGTGCTCGACGTTGTCACTGAAGCGGGAAGGGACT
GGCTGCTATTGGGCGAAGTGCCGGGGCAGGATCTCCTGTCATCTCACCTTGCTCCTGCCGAGA
AAGTATCCATCATGGCTGATGCAATGCGGCGGCTGCATACGCTTGATCCGGCTACCTGCCCAT
TCGACCACCAAGCGAAACATCGCATCGAGCGAGCACGTACTCGGATGGAAGCCGGTCTTGTC
GATCAGGATGATCTGGACGAAGAGCATCAGGGGCTCGCGCCAGCCGAACTGTTCGCCAGGCT
CAAGGCGCGCATGCCCGACGGCGAGGATCTCGTCGTGACCCATGGCGATGCCTGCTTGCCGA
ATATCATGGTGGAAAATGGCCGCTTTTCTGGATTCATCGACTGTGGCCGGCTGGGTGTGGCGG
ACCGCTATCAGGACATAGCGTTGGCTACCCGTGATATTGCTGAAGAGCTTGGCGGCGAATGGG
CTGACCGCTTCCTCGTGCTTTACGGTATCGCCGCTCCCGATTCGCAGCGCATCGCCTTCTATCG
CCTTCTTGACGAGTTCTTCTGAGCGGGACTCTGGGGTTCGAAATGACCGACCAAGCGACGCCC
AACCTGCCATCACGAGATTTCGATTCCACCGCCGCCTTCTATGAAAGGTTGGGCTTCGGAATC
GTTTTCCGGGACGCCGGCTGGATGATCCTCCAGCGCGGGGATCTCATGCTGGAGTTCTTCGCC
CACCCCGGGCTCGATCCCCTCGCGAGTTGGTTCAGCTGCTGCCTGAGGCTGGACGACCTCGCG
GAGTTCTACCGGCAGTGCAAATCCGTCGGCATCCAGGAAACCAGCAGCGGCTATCCGCGCAT
CCATGCCCCCGAACTGCAGGAGTGGGGAGGCACGATGGCCGCTTTGGTCGAGGCGGATCAAT
TCGATAGCTTGGGCCTGCTAGGAGCGCGAGCGCGCGGCCGCACTTTCTCGCGCCTGCGCGCGC
GCACGCCTCAACCTGTGCGGGACCGGCCTTGGGGGCGGAGCCTTAGCTACACAAATAGAATG
CGCGGCGGGCCTTGGTGGGGGCGGGGCCTTAGCTGCACAAATAGGATGCGCGGCGGGCCTTG
GTAGGGGCGGAGCCTTAGCTGCACAAATAGGATGCGCGGCGGGCCTTGGTGGGGGCGGGGCC
TAAGCTGCGCAAGTGGTACACAGCTCAGGGCTGCGATTTCGCGCCAAACTTGACGGCAAATCC
TAGCGTGAAGGCTGGTAGGATTTTATCCCCGCTGCCATCATGGTTCGACCTGCAGCCAAGCTA
TCAAGAGCTTGTTTAACATCGATAAAATAAAAGATTTTATTTAGTCTCCAGAAAAAGGGGGGA

ATGAAAGACCCCACCTGTAGGTTTGGCAAGCTAGCTTAAGTAACGCCATTTTGCAAGGCATGG
AAAAATACATAACTGAGAATAGAGAAGTTCAGATCAAGGTCAGGAACAGATGGAACAGCTG
AATATGGGCCAAACAGGATATCTGTGGTAAGCAGTTCCTGCCCCGGCTCAGGGCCAAGAACA
GATGGAACAGCTGAATATGGGCCAAACAGGATATCTGTGGTAAGCAGTTCCTGCCCCGGCTC
AGGGCCAAGAACAGATGGTCCCCAGATGCGGTCCAGCCCTCAGCAGTTTCTAGAGAACCATC
AGATGTTTCCAGGGTGCCCCAAGGACCTGAAATGACCCTGTGCCTTATTTGAACTAACCAATC
AGTTCGCTTCTCGCTTCTGTTCGCGCGCTTCTGCTCCCCGAGCTCAATAAAAGAGCCCACAACC
CCTCACTCGGGGCGCCAGTCCTCCGATTGACTGAGTCGCCCGGGTACCCGTGTATCCAATAAA
CCCTCTTGCAGTTGCATCCGACTTGTGGTCTCGCTGTTCCTTGGGAGGGTCTCCTCTGAGTGAT
TGACTACCCGTCAGCGGGGGTCTTTCATTTGGGGGCTCGTCCGGGATCGGGAGACCCCTGCCC
AGGGACCACCGACCCACCACCGGGAGGTAAGCTGGCTGCCTCGCGCGTTTCGGTGATGACGG
TGAAAACCTCTGACACATGCAGCTCCCGGAGACGGTCACAGCTTGTCTGTAAGCGGATGCCGG
GAGCAGACAAGCCCGTCAGGGCGCGTCAGCGGGTGTTGGCGGGTGTCGGGGCGCAGCCATGA
CCCAGTCACGTAGCGATAGCGGAGTGTATACCTAGCTAGGTAGCTAGAGGATCTTTGTGAAGG
AACCTTACTTCTGTGGTGTGACATAATTGGACAAACTACCTACAGAGATTTAAAGCTCTAAGG
TAAATATAAAATTTTTAAGTGTATAATGTGTTAAACTACTGATTCTAATTGTTTGTGTATTTTA
GATTCCAACCTATGGAACTGATGAATGGGAGCAGTGGTCCAATGCCTTTAATGAGGAAAACCT
GTTTTGCTCAGAAGAAATGCCTCTAGTGATGATGAGGCTACTGCTGACTCTCAACATTCTACTC
CTCCAAAAAAGAAGAGAAAGGTAGAAGACCCCAAGGACTTTCCTTCAGAATTGCTAAGTTTTT
TGAGTCATGCTGTGTTTAGTAATAGAACTCTTGCTTGCTTTGCTATTTACACCACAAAGGAAAA
AGCTGCACTGCTATACAAGAAAATTATGGAAAAATATTTGATGTATAGTGCCTTGACTAGAGA
TCATAATCAGCCATACCACATTTGTAGAGGTTTTACTTGCTTTAAAAAACCTCCCACACCTCCC
CCTGAACCTGAAACATAAAATGAATGCAATTGTTGTTGTTAACTTGTTTATTGCAGCTTATAAT
GGTTACAAATAAAGCAATAGCATCACAAATTTCACAAATAAAGCATTTTTTTCACTGCATTCT
AGTTGTGGTTTGTCCAAACTCATCAATGTATCTTATCATGTCTGGATCAGCTTCAGAAGATGGC
GGAGGGCCTCCAACACAGTAATTTTCCTCCCGACTCTTAAAATAGAAAATGTCAAGTCAGTTA
AGCAGGAAGTGGACTAACTGACGCAGCTGGCCGTGCGACATCCTCTTTTAATTAGTTGCTAGG
CAACGCCCTCCAGAGGGCGTGTGGTTTTGCAAGAGGAAGCAAAAGCCTCTCCACCCAGGCCT
AGAATGTTTCCACCCAATCATTACTATGACAACAGCTGTTTTTTTTAGTATTAAGCAGAGGCCG
GGGACCCCTGGCCCGCTTACTCTGGAGAAAAAAAACATTGTAGAGGCTTCCAGAGGCAACTT
GTCAAAACAGGACTGCTTCTATTTCTGTCACACTGTCTGGCCCTGTCACAAGGTCCAGCACCTC
CATACCCCCTTTAATAAGCAGTTTGGGAACGGGTGCGGGTCTTACTCCGCCCATCCGCCCCTA
ACTCCGCCCAGTTCCGCCCATTCTCCGCCCCATGCTGACTAATTTTTTTTATTTATGCAGAGGC
CGAGGCCGCCTCGGCCTCTGAGCTATTCCAGAAGTAGTGAGGAGGC
TTTTTTGGAGGCTGCATTAATGAATCGGCCAACGCGCGGGGAGAGGCGGTTTGCGTATTGGGC
GCTCTTCCGCTTCCTCGCTCACTGACTCGCTGCGCTCGGTCGTTCGGCTGCGGCGAGCGGTATC
AGCTCACTCAAAGGCGGTAATACGGTTATCCACAGAATCAGGGGATAACGCAGGAAAGAACA
TGTGAGCAAAAGGCCAGCAAAAGGCCAGGAACCGTAAAAAGGCCGCGTTGCTGGCGTTTTTC
CATAGGCTCCGCCCCCCTGACGAGCATCACAAAAATCGACGCTCAAGTCAGAGGTGGCGAAA
CCCGACAGGACTATAAAGATACCAGGCGTTTCCCCCTGGAAGCTCCCTCGTGCGCTCTCCTGT
TCCGACCCTGCCGCTTACCGGATACCTGTCCGCCTTTCTCCCTTCGGGAAGCGTGGCGCTTTCT
CATAGCTCACGCTGTAGGTATCTCAGTTCGGTGTAGGTCGTTCGCTCCAAGCTGGGCTGTGTG
CACGAACCCCCCGTTCAGCCCGACCGCTGCGCCTTATCCGGTAACTATCGTCTTGAGTCCAAC
CCGGTAAGACACGACTTATCGCCACTGGCAGCAGCCACTGGTAACAGGATTAGCAGAGCGAG
GTATGTAGGCGGTGCTACAGAGTTCTTGAAGTGGTGGCCTAACTACGGCTACACTAGAAGGAC
AGTATTTGGTATCTGCGCTCTGCTGAAGCCAGTTACCTTCGGAAAAAGAGTTGGTAGCTCTTG
ATCCGGCAAACAAACCACCGCTGGTAGCGGTGGTTTTTTTGTTTGCAAGCAGCAGATTACGCG
CAGAAAAAAAGGATCTCAAGAAGATCCTTTGATCTTTTCTACGGGGTCTGACGCTCAGTGGAA
CGAAAACTCACGTTAAGGGATTTTGGTCATGAGATTATCAAAAAGGATCTTCACCTAGATCCT
TTTAAATTAAAAATGAAGTTTTAAATCAATCTAAAGTATATATGAGTAAACTTGGTCTGACAG
TTACCAATGCTTAATCAGTGAGGCACCTATCTCAGCGATCTGTCTATTTCGTTCATCCATAGTT
GCCTGACTCCCCGTCGTGTAGATAACTACGATACGGGAGGGCTTACCATCTGGCCCCAGTGCT
GCAATGATACCGCGAGACCCACGCTCACCGGCTCCAGATTTATCAGCAATAAACCAGCCAGC
CGGAAGGGCCGAGCGCAGAAGTGGTCCTGCAACTTTATCCGCCTCCATCCAGTCTATTAATTG
TTGCCGGGAAGCTAGAGTAAGTAGTTCGCCAGTTAATAGTTTGCGCAACGTTGTTGCCATTGC
TGCAGGCATCGTGGTGTCACGCTCGTCGTTTGGTATGGCTTCATTCAGCTCCGGTTCCCAACGA

TCAAGGCGAGTTACATGATCCCCCATGTTGTGCAAAAAAGCGGTTAGCTCCTTCGGTCCTCCG
ATCGTTGTCAGAAGTAAGTTGGCCGCAGTGTTATCACTCATGGTTATGGCAGCACTGCATAAT
TCTCTTACTGTCATGCCATCCGTAAGATGCTTTTCTGTGACTGGTGAACTCAACCAAGTCATTC
TGAGAATAGTGTATGCGGCGACCGAGTTGCTCTTGCCCGGCGTCAATACGGGATAATACCGCG
CCACATAGCAGAACTTTAAAAGTGCTCATCATTGGAAAACGT
TCTTCGGGGCGAAAACTCTCAAGGATCTTACCGCTGTTGAGATCCAGTTCGATGTAACCCACT
CGTGCACCCAACTGATCTTCAGCATCTTTTACTTTCACCAGCGTTTCTGGGTGAGCAAAAACA
GGAAGGCAAAATGCCGCAAAAAAGGGAATAAGGGCGACACGGAAATGTTGAATACTCATAC
TCTTCCTTTTTCAATATTATTGAAGCATTTATCAGGGTTATTGTCTCATGAGCGGATACATATTT
GAATGTATTTAGAAAAATAAACAAATAGGGGTTCCGCGCACATTTCCCCGAAAAGTGCCACCT
GACGTCTAAGAAACCATTATTATCATGACATTAACCTATAAAAATAGGCGTATCACGAGGCCC
TTTCGTCTCGCGCGTTTCGGTGATGACGGTGAAAACCTCTGACACATGCAGCTCCCGGAGACG
GTCACAGCTTGTCTGTAAGCGGATGCCGGGAGCAGACAAGCCCGTCAGGGCGCGTCAGCGGG
TGTTGGCGGGTGTCGGGGCTGGCTTAACTATGCGGCATCAGAGCAGATTGTACTGAGAGTGCA
CCATATGCGGTGTGAAATACCGCACAGATGCGTAAGGAGAAAATACCGCATCAGGCGCCATT
CGCCATTCAGGCTGCGCAACTGTTGGGAAGGGCGATCGGTGCGGGCCTCTTCGCTATTACGCC

CMV – 21- 584 bp
RU5 – 584- 700 bp
Neo – 1645 – 2643
DHFR – 2832 – 3615
3’LTR – 3637 – 3878
AMP – 7624 – 5155C